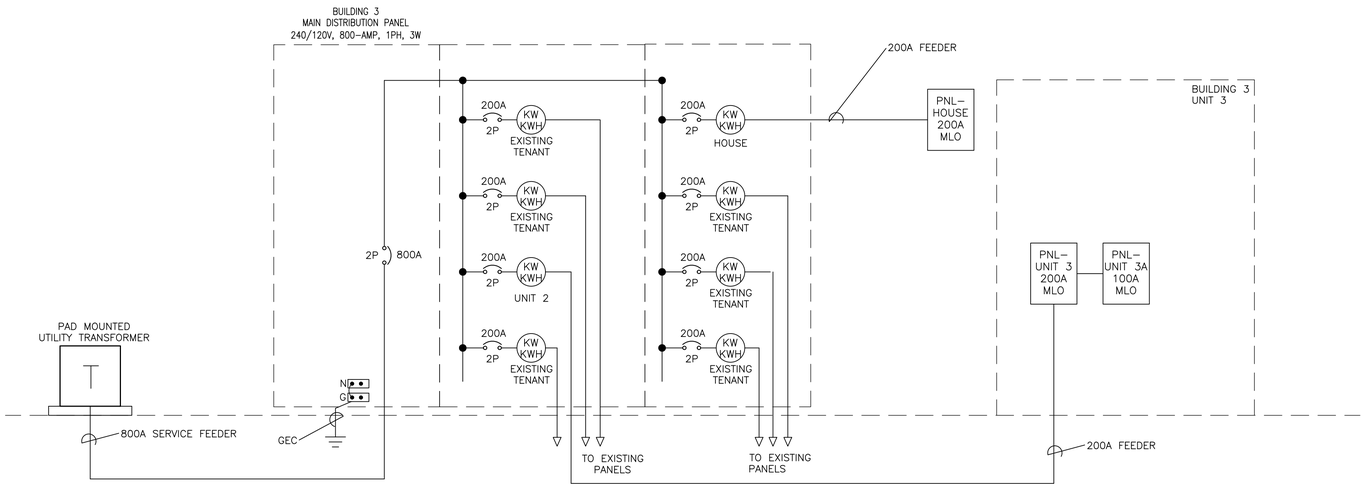

DIAGRAM NOTES

1. ALL WORK SHOWN IS EXISTING UNLESS OTHERWISE NOTED.
2. BRING ANY DISCOVERED CODE VIOLATIONS TO THE OWNER'S ATTENTION.
3. ALL WIRING SHOWN IS SIZED FOR COPPER CONDUCTORS, UON

2 SINGLE LINE DIAGRAM – BLDG 3, UNIT 3
NTS

GENERAL NOTES

1. ALL WORK SHOWN IS NEW, UNLESS NOTED OTHERWISE.
2. ALL WORK TO BE IN ACCORDANCE WITH NATIONAL ELECTRIC CODE, 2020 EDITION.
3. SEAL ALL CONDUIT PENETRATIONS OF FLOORS AND FIRE RATED ASSEMBLIES TO MAINTAIN FIRE RATING.
4. PROVIDE NEW TYPEWRITTEN DIRECTORIES REFLECTING WORK PERFORMED FOR ALL NEW PANELBOARDS IN THIS PROJECT.
5. PLANS ARE PREPARED WITH REQUIRED BRANCH CIRCUITS INDICATED BY CIRCUIT NUMBERS. PROVIDE AND INSTALL ALL CONDUITS, CONDUCTORS, BOXES, MISCELLANEOUS FITTINGS, ETC. FOR A COMPLETE AND OPERABLE SYSTEM (HOMERUN SHOWN). BRANCH CIRCUIT INSTALLATION SHALL COMPLY WITH SPECIFICATIONS AND N.E.C.
6. ALL NEUTRAL CONDUCTORS ON POWER BRANCH CIRCUITING ROUNDHOUSES TO BE #10 AWG UNLESS NOTED OTHERWISE.

REVIEWED FOR CODE COMPLIANCE
03/18/2025

ELECTRIC LOAD SUMMARY
Load Tab

Client Name: SEAD
Project Name: Riverfront Industrial Park - BLDG 3, UNIT 3
Project No: 2024003
Date: May 13, 2024

	TYPE	SQ. FT.		
	Residential	**2486**		
	VA/S.F. OR QTY.	**VA**	**TOTAL**	**NOTES**
GENERAL LIGHTING LOAD				
GENERAL LIGHTING	3	7,458	7,458	Per NEC 220.82(B)(1)
SMALL APPLIANCE	2	1,500	3,000	Per NEC 220.82(B)(2)
LAUNDRY	1	1,500	1,500	Per NEC 220.82(B)(2)
TOTAL			**11,958**	
APPLIANCE LOADS				Per NEC 220.82(B)(3) & (4)
REFRIGERATOR	2	1,200	2,400	
DISHWASHER	1	1,200	1,200	
DISPOSAL	1	1,200	1,200	
RANGE HOOD	1	750	750	
RANGE	1	8,000	8,000	
MICROWAVE	1	1,200	1,200	
DRYER	1	5,000	5,000	
HEAT TAPE	1	1,500	1,500	
GARAGE DOOR	1	1,500	1,500	
			0	
			22,750	
GEN. LTG AND APPLIANCE LOAD			**34,708**	
DEMAND FACTOR				**NOTES**
100% FIRST 10,000 VA			10000	Per NEC 220.83
40% FOR REMAINDER OF LOAD			9883	Per NEC 220.82(B)
TOTAL			**19,883**	
HEATING & COOLING				Per NEC 220.82.C
A/C UNIT	1	2,500	2,500	
TOTAL			**2,500**	
SUPPLEMENTAL HEATING				
BASEBOARD HEATING	1	2500	2,500	
SUPPLEMENTAL HEATING TOTAL			2,500	
DEMAND FACTOR				**NOTES**
65% OF SUPPLEMENTAL HEATING LOAD			1625	Per NEC 220.82.C.4
TOTAL			**1,625**	
TOTAL (VA)			**24,008**	Gen. Ltg & Appl. Load + AC
			100 AMPS @ 240V, 1-PH	

1 LOAD CALCULATION– BLDG 3, UNIT 3
NTS

RIVERFRONT INDUSTRIAL PARK
1522 Shield Dr
Steamboat Springs, CO

SEAD
2740 Acre Lane, Suite E
Steamboat Springs, CO

WILDER ENGINEERING LLC
Andrew Wilder PE
1170 Blue Sage Drive
Steamboat Springs, CO 80487
P: 970-819-7848
E: andy@wilder-eng.com

COLORADO LICENSED
ANDREW CHARLES WILDER
49009
PROFESSIONAL ENGINEER

Issue	By Date & Issue Description	By
–	PERMIT SET – 5.13.24	AW

Scale: NTS
24x36
Description: ONE LINE, LOAD CALCS
Project Name: RIVERFRONT - BLDG 3, UNIT 3
Project Number: 2024003
Sheet No.
E-1.3