APPROVED
ATMOS ENERGY CORPORATION
2# Systems will not be allowed unless proof of an appliance requiring a MINUMUM of over 7" W.C. is provided to Atmos Energy Corporation personnel for review.
Meter location must be approved by an Atmos Energy Corporation employee during a mandatory site visit to be scheduled after foundation is in place. Meters will not be allowed under a shedding roofline or where overhanging snow is a danger to the meter set.

PJ2853-2
Fire Prevention
In: 03/14/2018
Out: 03/16/2018
On hold pending TAC review and approval

RCRBD

RECORD SET

FINAL DEVELOPMENT PLAN
TORIAN PARKING STRUCTURE
WATERPROOFING / RENOVATION - PHASE 2
1855 SKI TIME SQUARE DRIVE
STEAMBOAT SPRINGS, CO

TORIAN PLUM H.O.A.
OCTOBER 20, 2017
100% CONSTRUCTION DOCUMENTS

PROJECT CONSULTANTS

LANDSCAPE ARCHITECTS
WENK ASSOCIATES, INC
1130 31ST STREET, STE 101
DENVER, CO 80205

CONTACT: JC CULWELL
303.628.0003
jculwell@wenkla.com

CIVIL ENGINEERING
LANDMARK CONSULTANTS INC.
141 9TH STREET
PO BOX 774943
STEAMBOAT SPRINGS, CO 80487

CONTACT: DEB SPAUSTAT
970.871.9494
debs@landmark-co.com

STRUCTURAL ENGINEER
MARTIN/MARTIN INC.
12499 W. COLFAX AVE
LAKEWOOD, CO 80215
303.431.6100

CONTACT: DAVID WITTMAN
dwittman@martinmartin.com

WATERPROOFING
MARTIN/MARTIN INC.
12499 W. COLFAX AVE
LAKEWOOD, CO 80215
303.431.6100

CONTACT: KEVIN DUNHAM
kdunham@martinmartin.com

MECHANICAL/ELECTRICAL
MEP ENGINEERING, INC.
6402 S TROY CIRCLE, SUITE 100
CENTENNIAL, CO 80111
303.936.1633 ext. 356

CONTACT: BRETT WIXSOM
brett@mep-eng.com

IRRIGATION
HYDROSYSTEMS-KDI, INC.
860 TABOR STREET, SUITE 200
LAKEWOOD, CO 80401
303.980.5327

CONTACT: KEN DIPAOLO
kend@hydrosystemskdi.com

PROPOSED PLAZA

APPLICATION INFORMATION:

JOHN SHIPLEY
STEAMBOAT RESORTS BY WYNDHAM VACATION RENTALS
1855 SKI TIME SQUARE DRIVE
STEAMOBOAT SPRINGS, CO 80487
970.870.7804
john.shipley@wynvr.com

OWNER INFORMATION:

TORIAN PLUM OWNERS ASSOCIATION, INC.
1855 SKI TIME SQUARE DRIVE
STEAMOBOAT SPRINGS, CO 80487
970.879.8811
SteamboatOwners@wynvr.com

LEGAL DESCRIPTION:

COMMON AREA, TORIAN PLUM CONDO, PHASE I
PARCEL: 166977001 ACCOUNT: R8170309
1847 SKI TIME SQUARE DRIVE
STEAMOBOAT SPRINGS, CO 80487

COMMON AREA, TORIAN PLUM CONDO, PHASE II
PARCEL: 212577001 ACCOUNT: R8165209
1875 SKI TIME SQUARE DRIVE
STEAMOBOAT SPRINGS, CO 80487

PROJECT LOCATION

PROJECT SUMMARY TABLE			
GROSS FLOOR AREA	N/A		
NET FLOOR AREA	N/A		
UNIT SIZE	N/A		
NUMBER OF UNITS	N/A		
ZONING (EXISTING AND PROPOSED)	N/A		
FRONTAGE	N/A		
USE BREAKDOWN	**DESCRIPTION**	**SQUARE FOOTAGE**	**# OF UNITS**
PRINCIPAL USE	N/A	N/A	N/A
ACCESSORY USE(S)	N/A	N/A	N/A
STANDARDS	**ZONE DISTRICT REQUIREMENTS**	**PROPOSED**	**VARIANCE? (Y/N)**
LOT AREA	NO MIN. NO MAX.	N/A	N
LOT COVERAGE	65% MAX.	N/A	N
FLOOR AREA RATIO	NO MAX.	N/A	N
BUILDING HEIGHT	105' MAX.	N/A	N
FRONTAGE AREA HEIGHT	NOT LISTED IN CDC	N/A	N
FRONT SETBACK	REQUIRED TO PROVIDE PUBLIC GATHERING SPACES AND PEDESTRIAN CORRIDORS	N/A	N
SIDE SETBACK	REQUIRED TO PROVIDE PUBLIC GATHERING SPACES AND PEDESTRIAN CORRIDORS	N/A	N
UPPER STORY SETBACK	ABOVE 3 STORIES OR 45'- STEP BACKS AT LEAST 8' IN DEPTH AND AT LEAST 12-45' ABOVE FFE	N/A	N
REAR SETBACK	REQUIRED TO PROVIDE PUBLIC GATHERING SPACES AND PEDESTRIAN CORRIDORS	N/A	N
SECOND STORY INTENSITY	NOT LISTED IN CDC	N/A	N
PARKING	NOT LISTED IN CDC	N/A	N
SNOW STORAGE	NOT LISTED IN CDC	N/A	N

GENERAL NOTES

1. CONTRACTOR SHALL FIELD VERIFY ALL ITEMS REQUIRING REMOVAL AND PROTECTION WITH OWNER'S REPRESENTATIVE PRIOR TO CONSTRUCTION.
2. CONTRACTOR SHALL VERIFY LOCATIONS OF EXISTING TREES AND SHRUBS TO BE REMOVED OR RELOCATED WITH OWNER'S REPRESENTATIVE PRIOR TO START OF CONSTRUCTION. CONTRACTOR SHALL MARK/FLAG INDIVIDUAL TREES TO BE REMOVED AND TO REMAIN FOR THE APPROVAL OF OWNER'S REPRESENTATIVE.
3. PRIOR TO COMMENCING DEMOLITION OPERATIONS, CONTRACTOR SHALL CONTACT ALL UTILITY LOCATOR SERVICES AND CONFIRM ALL SERVICE LINES AND UTILITY LOCATIONS WITHIN THE LIMITS OF WORK.
4. PRIOR TO DEMOLITION OPERATIONS, CONTRACTOR SHALL PLACE TREE PROTECTION FENCING, BARRICADES, SIGNAGE, AND EROSION CONTROL MEASURES AS DESCRIBED IN THE PLAN AND SPECIFICATIONS AND APPROVED CASMP.
5. CONTRACTOR SHALL THOROUGHLY REMOVE AND DISPOSE OF ALL PLANT MATERIALS, INCLUDING ROOTS, WITHIN AREAS SHOWN FOR DEMOLITION.
6. THE CONTRACTOR SHALL BE AWARE THAT UNDERGROUND IMPROVEMENTS MAY EXIST THAT ARE NOT SHOWN IN THE CONSTRUCTION PLANS INCLUDING, BUT NOT LIMITED TO, FOUNDATIONS, DEBRIS, ELECTRIC AND COMMUNICATION CONDUITS, PIPES, AND STORM DRAIN AND SEWER CONNECTIONS. THE CONTRACTOR SHALL IMMEDIATELY NOTIFY THE OWNER'S REPRESENTATIVE IF THESE UNKNOWN IMPROVEMENTS ARE LOCATED, EXPOSED, OR DAMAGED.
7. CONTRACTOR SHALL NOT PROCEED WITH CONSTRUCTION WHEN IT IS APPARENT THAT PREVIOUSLY UNKNOWN OBSTRUCTIONS AND/OR GRADE DIFFERENCES EXIST THAT MAY NOT HAVE BEEN KNOWN DURING DESIGN. SUCH CONDITIONS SHALL BE IMMEDIATELY BROUGHT TO THE ATTENTION OF THE OWNER'S REPRESENTATIVE FOR DIRECTION. THE CONTRACTOR SHALL ASSUME RESPONSIBILITY FOR ALL NECESSARY REVISIONS AND REPAIR COSTS THAT ARE THE RESULT OF FAILURE TO GIVE SUCH NOTIFICATION.
8. CONTRACTOR SHALL BE RESPONSIBLE FOR MAKING THEMSELVES FAMILIAR WITH ALL UNDERGROUND UTILITIES, PIPES AND STRUCTURES. CONTRACTOR SHALL TAKE RESPONSIBILITY FOR ANY COST INCURRED DUE TO DAMAGE TO UTILITIES. CONTACT UNDERGROUND CONSULTING SOLUTIONS (303-904-7422) PRIOR TO ANY CONSTRUCTION ACTIVITY.
9. CONTRACTOR IS RESPONSIBLE FOR SECURING AND PROPERLY DISPLAYING ALL GOVERNING PERMITS, ALL REQUIRED CITY OF STEAMBOAT SPRINGS & ROUTT COUNTY PERMITS, AND STATE PERMITS.
10. CONTRACTOR TO INSTALL ALL HARDSCAPE IN ACCORDANCE WITH THE STATE OF COLORADO AND THE AMERICAN DISABILITY ACTS STANDARDS.
11. CONTRACTOR SHALL BE RESPONSIBLE FOR COORDINATION OF THE SUBCONTRACTORS ACCOMPLISHMENT OF SCOPE OF WORK. CONTRACTOR SHALL COORDINATE CONSTRUCTION WITH OTHER TRADES WORKING ON THE SITE SIMULTANEOUSLY.
12. REFER TO CIVIL DOCUMENTS FOR STORM & SANITARY SEWER AND ADDITIONAL SITE INFORMATION.
13. CONTRACTOR SHALL PROVIDE MOCKUPS AND SHOP DRAWINGS FOR APPROVAL PER SPECIFICATIONS PRIOR TO CONSTRUCTION. ALL IMPROVEMENTS SHALL BE CONSTRUCTED TO MEET THE APPROVED MOCKUP OR SHOP DRAWING.
14. CONTRACTOR SHALL REPLACE OR REPAIR TO ORIGINAL CONDITION ALL UTILITIES, PAVING, CURBING, ETC., DAMAGED AS A RESULT OF HIS OPERATIONS AT NO ADDITIONAL COST TO OWNER.

RCRBD has placed PEM plans in a new permit TB-18-162 along with ESA Boiler Building plans submitted for review and approval.

INDEX OF DRAWINGS

X = NEW SHEET
R = REVISED DRAWING
S = NO MODIFICATION
D = DELETED SHEET
N = NOT INCLUDED

R C R B D

RECORD SET

		60% CD PACKAGE 06/16/2017	90% CD PACKAGE 09/22/2017	100% CD PACKAGE 10/20/2017	DEVELOPMENT PLAN #1 03/02/2018	BUILDING DEPT #1 03/06/2018
GENERAL						
G0.00	COVER	X	R	R	R	R
CV1.0	NOTES AND SHEET INDEX	X	R	R	R	R
SURVEY						
SU1	SURVEY	X	S	S		S
EXISTING CONDITIONS						
EC1.0	EXISTING CONDITIONS PLAN	X	S	S	R	S
DEMOLITION						
DM1.1	DEMO PLAN	X	R	R	R	R
CIVIL						
C1.0	STORM PLANS	X	R	R		R
C2.0	SANITARY	X	R	R		S
LANDSCAPE						
G1.0	GRADING PLAN	X	R	R		R
L1.0	LAYOUT & MATERIALS PLAN	X	R	R	R	R
L1.1	SUBGRADE MATERIALS PLAN		X	R		R
L2.0	ENLARGEMENT PLAN	X	R	R		S
L3.0	SITE DETAILS	X	R	R		S
L3.1	SITE DETAILS	X	R	R		R
L3.2	SITE DETAILS	X	R	R		S
L3.3	SITE DETAILS	X	R	R		R
L3.4	SITE DETAILS	X	R	R		R
L3.5	SITE DETAILS		X	R		R
L3.6	SITE DETAILS		X	R		R
L3.7	SITE DETAILS		X	R		S
L3.8	PLANTING DETAILS		X	R		S
L4.0	PLANTING PLAN	X	R	R		R
L4.1	PLANTING ENLARGEMENT PLANS			X		S
IRRIGATION						
IR1.0	IRRIGATION NOTES AND SCHEDULE	X	R	R		S
IR1.1	IRRIGATION PLANS	X	R	R		R
IR1.2	IRRIGATION DETAILS	X	R	R		S
STRUCTURAL - WATERPROOFING						
S0.1	NOTES	X	R	R		S
S1.0	REPAIR NOTES	X	R	R		S
S1.1	REPAIR PLAN	X	R	R		S
S1.2	WP - SITE PLAN	X	R	R		S
S2.0	DETAILS	X	R	R		S
S2.1	DETAILS		X	R		S
S2.2	WATERPROOFING DETAILS		X	R		S
MECHANICAL						
M0.1	SNOW MELT LEGENDS AND SHEET INDEX	X	R	R		
M0.2	SNOW MELT SYSTEM PLAN	X	R	R		
M0.3	MECHANICAL DETAILS		X	R		
M1.0	MECHANICAL SITE PLAN	X	R	R		
M2.0	SNOWMELT ZONE 7, 8, & 11 AREA		X	R		
M2.1	SNOWMELT ZONE 9 & 10 AREA		X	R		
M3.0	BOILER ROOM EQUIPMENT LAYOUT		X	R		
M3.1	BOILER ROOM MECHANICAL PLAN	X	R	R		
ELECTRICAL						
E0.1	LEGEND AND ONE-LINE	X	R	R		
E0.2	SCHEDULES	X	R	R		
E1.0	ELECTRICAL SITE PLAN	X	R	R		
E2.0	BOILER ROOM PLANS	X	R	R		
E3.0	SITE PHOTOMETRIC PLAN				X	N
E3.1	PHOTOMETRIC DETAILS				X	N
PLUMBING						
P0.1	PLUMBING SCHEDULES AND DIAGRAMS	X	R	R		
P1.0	PLUMBING SITE PLANS	X	R	R		
P2.0	BOILER ROOM PLUMBING PLAN		X	R		

w e n k
ASSOCIATES
PLANNERS & LANDSCAPE ARCHITECTS
303.628.0003

JOSHUA J. CULWELL
985
10/25/2012
Original Date of Licensure
STATE OF COLORADO
LICENSED LANDSCAPE ARCHITECT

WATERPROOFING / RENOVATION - PHASE 2
TORIAN PLUM PARKING STRUCTURE
STEAMBOAT SPRINGS, CO

Date 10.22.18
Drawn By BP
Reviewed by JC
Job No. 16021.01

Revisions

Name	Date
DP DEV. PLAN #1	03/02/2018
BLDG DEPT #1	03/06/18

Issue:
100% Construction Documents

Sheet Title:
Notes & Sheet Index

Sheet Number
CV1.0

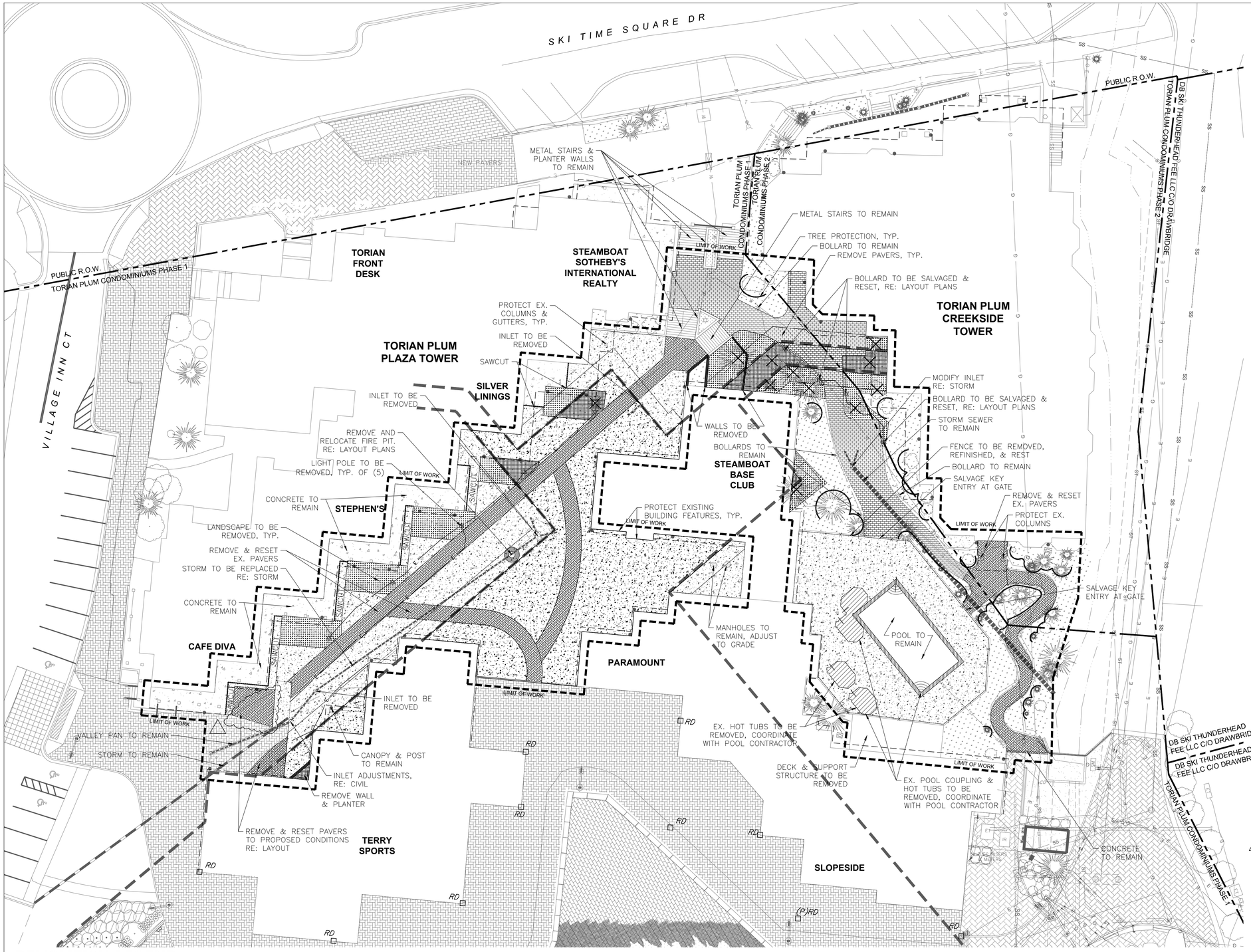

DEMOLITION LEGEND

- CONCRETE PAVEMENT TO BE REMOVED
- CONCRETE PAVEMENT TO BE REMOVED (ON STRUCTURE)
- CONCRETE PAVERS TO BE REMOVED
- CONCRETE PAVERS TO BE REMOVED (ON STRUCTURE)
- LANDSCAPE TO BE REMOVED
- LANDSCAPE TO BE REMOVED (ON STRUCTURE)
- CONCRETE PAVERS TO BE REMOVED & RESET
- HOT TUB & POOL COPING REMOVAL, POOL CONTRACTOR SCOPE
- SAWCUT CONCRETE
- FENCE TO BE REMOVED
- LIGHT POLE AND BASE TO BE REMOVED
- TREE TO BE REMOVED
- TREE PROTECTION FENCING
- (E) ELECTRICAL RECEPTACLE TO BE REMOVED
- ROOF DRAIN TO REMAIN
- LIMIT OF WORK
- PARKING STRUCTURE BELOW
- OVERHEAD STRUCTURE
- STORM PIPE
- UTILITY TO BE REMOVED

NORTH

0 10 20 40

SCALE: 1"=20'-0"

RCRBD

RECORD SET

DEMOLITION & PROTECTION NOTES

1. CONTRACTOR SHALL FIELD VERIFY ALL DEMOLITION WITH OWNER'S REPRESENTATIVE PRIOR TO CONSTRUCTION.
2. CONTRACTOR TO POTHOLE ALL EXISTING UTILITIES THAT ARE WITHIN 5' OF ALL PLANNED FOR UTILITIES AND TO POTHOLE ALL UTILITIES THAT REQUIRE UTILITY CROSSING OR COORDINATION.
3. THE CONTRACTOR IS PUT ON NOTICE THAT CONDITIONS MAY EXIST UNDERGROUND THAT ARE NOT SHOWN IN THE SURVEY OR CONSTRUCTION PLANS INCLUDING, BUT NOT LIMITED TO, LIGHTING, SANITARY SEWER, STORM SEWER, GAS LINES, & IRRIGATION CONDUITS. THE CONTRACTOR SHALL IMMEDIATELY NOTIFY THE OWNER'S REPRESENTATIVE IF UNANTICIPATED CONDITIONS ARE ENCOUNTERED DURING CONSTRUCTION.
4. CONTRACTOR SHALL ERECT AND MAINTAIN TREE PROTECTION FENCING, BARRICADES, SIGNAGE, AND EROSION CONTROL MEASURES AS DESCRIBED IN THE SPECIFICATIONS PRIOR TO COMMENCING DEMOLITION OPERATIONS.
5. CONTRACTOR SHALL THOROUGHLY CLEAR, GRUB, AND DISPOSE OF EXISTING PLANT MATERIAL AREAS SHOWN FOR DEMOLITION.
6. CONTRACTOR SHALL COORDINATE SITE DEMOLITION OPERATIONS WITH ALL OTHER TRADES PERFORMING WORK ON THE PROJECT.
7. CONTRACTOR SHALL REPLACE OR REPAIR TO ORIGINAL CONDITION ALL BUILDINGS, UTILITIES, AND SITE IMPROVEMENTS THAT ARE NOT DESIGNATED FOR REMOVAL, AND THAT ARE DAMAGED AS A RESULT OF CONSTRUCTION OPERATIONS, AT NO ADDITIONAL COST TO OWNER.
8. CONTRACTOR SHALL CAREFULLY REMOVE, SALVAGE, STOCKPILE, REUSE, AND RESET EXISTING SIGNAGE, PAVERS, SCULPTURES, MANHOLE COVERS, VALVE COVERS AND BOXES, TELEPHONE, ELECTRICAL, CABLE PEDESTALS, AND OTHER MISCELLANEOUS ITEMS AS REQUIRED AND DIRECTED BY OWNER'S REPRESENTATIVE, UNLESS OTHERWISE NOTED. STOCKPILE MATERIALS AT APPROVED LOCATION. CONTRACTOR SHALL LOCATE AND INSTALL THESE ITEMS AS THEY WERE ORIGINALLY INSTALLED EXCEPT AS OTHERWISE DIRECTED BY THE OWNER'S REPRESENTATIVE.
9. CONTRACTOR SHALL PROTECT AND MAINTAIN EXISTING ELECTRICAL SYSTEMS, CONDUIT, CONNECTIONS AND IMMEDIATELY RESTORE THEM WHEN DISRUPTED BY CONSTRUCTION, AT NO ADDITIONAL COST TO OWNER.
10. CALL UTILITY NOTIFICATION CENTER OF COLORADO AT LEAST 3 BUSINESS DAYS PRIOR TO COMMENCING WORK.
11. COORDINATE ADDITIONAL DEMOLITION REQUIREMENTS AS NECESSARY FOR CONSTRUCTION ACCESS AND STAGING.
12. DEMOLITION WORK ADJACENT TO EXISTING PAVEMENT SHALL BE SAWCUT TO MAINTAIN AN INTACT EDGE. DAMAGE TO THE EXISTING EDGE OF PAVEMENT WILL REQUIRE ADDITIONAL SAWCUTTING, REMOVAL AND REPLACEMENT. CONCRETE SHALL BE REMOVED AT EXISTING JOINT LOCATIONS.
13. ADJUST ALL EXISTING UTILITY MANHOLE COVERS, VALVE BOXES, FIRE HYDRANTS AND UTILITY BOXES TO FINAL GRADE.
14. CONTRACTOR SHALL PROVIDE FOR DUST CONTROL DURING DEMOLITION TO INCLUDE COVERING OF ALL TRUCKS HAULING DEBRIS OFF-SITE, PERIODICALLY CLEANING AND SWEEPING ADJACENT STREETS, AND APPLYING AN APPROVED DUST PALLIATIVE AS NECESSARY.
15. THOROUGHLY CLEAN ALL AREAS AND SURFACES IMPACTED BY DEMOLITION PRIOR TO START OF NEW CONSTRUCTION.
16. ENGINEERS / SURVEYOR/LANDSCAPE ARCHITECT ASSUME NO RESPONSIBILITY FOR BURIED UTILITIES. CONTRACTOR IS RESPONSIBLE FOR LOCATING AND PROTECTING ALL UTILITIES PRIOR TO AND DURING CONSTRUCTION.

BENCHMARK
TOP OF AN ALUMINUM CAP FOR THE NORTHWEST CORNER OF SECTION 27, T6N, R84W, SIXTH P.M. ELEVATION = 6913.45 (NGVD 29)

DESIGN TEAM ASSUMES NO RESPONSIBILITY FOR UTILITY LOCATIONS. THE UTILITIES SHOWN ON THIS DRAWING HAVE BEEN PLOTTED FROM THE BEST AVAILABLE INFORMATION. IT IS, HOWEVER, THE CONTRACTORS RESPONSIBILITY TO FIELD VERIFY THE SIZE, MATERIAL, HORIZONTAL AND VERTICAL LOCATION OF ALL UTILITIES PRIOR TO THE COMMENCEMENT OF ANY CONSTRUCTION.

w e n k
ASSOCIATES
PLANNERS & LANDSCAPE ARCHITECTS
303.628.0003

JOSHUA J. CULWELL 985
10/25/2012
Original Date of Licensure
09.06.18
STATE OF COLORADO
LICENSED LANDSCAPE ARCHITECT

WATERPROOFING / RENOVATION - PHASE 2
TORIAN PLUM PARKING STRUCTURE
STEAMBOAT SPRINGS, CO

Date	10.22.18
Drawn By	BP
Reviewed by	JC
Job No.	16021.01

Revisions

Name	Date
ADDENDUM A	01/05/18
BLDG DEPT #1	03/06/18

Issue:
100% Construction Documents

Sheet Title:
Demolition Plan

Sheet Number
DM1.0

SURVEYOR'S STATEMENT – TOPOGRAPHIC SURVEY

I, PATRICK C. O'HEARN, A REGISTERED PROFESSIONAL LAND SURVEYOR LICENSED IN THE STATE OF COLORADO, DO HEREBY CERTIFY THAT THIS MAP WAS MADE UNDER MY DIRECT RESPONSIBILITY, SUPERVISION AND CHECKING, THAT IT ACCURATELY DEPICTS THE LOCATION, ELEVATIONS AND DIMENSIONS OF THE IMPROVEMENTS AND SPOT MEASUREMENTS OBSERVED ON THE SUBJECT PROPERTY TAKEN DURING A SURVEY PERFORMED DECEMBER 19 THROUGH DECEMBER 22, 2011 AND THAT IT TRUE AND CORRECT TO THE BEST OF MY KNOWLEDGE AND BELIEF. I FURTHER CERTIFY THAT THIS MAP IS NOT A LAND SURVEY PLAT OR AN IMPROVEMENT SURVEY PLAT, THAT IT IS INTENDED ONLY TO GRAPHICALLY DEPICT THE INFORMATION DESCRIBED ABOVE AND THAT IT IS NOT TO BE RELIED UPON FOR THE ESTABLISHMENT OF FENCE, BUILDING, OR OTHER FUTURE IMPROVEMENT LINES THAT WOULD REQUIRE AN ACTUAL BOUNDARY SURVEY.

PATRICK C. O'HEARN PLS 23515
FOR AND ON BEHALF OF
DREXEL, BARRELL & CO.

COLORADO REGISTERED PATRICK C. O'HEARN 23515 PROFESSIONAL LAND SURVEYOR
01-26-12

NOTES:

1. THE PURPOSE OF THE MAP IS TO SHOW THE IMPROVEMENTS, SITE TOPOGRAPHY AND ELEVATIONS OF A PORTION OF THE PROPERTY LOCATED IN THE VICINITY OF THE TORIAN PLUM CONDOMINIUMS LOCATED NEAR SKI TIME SQUARE DRIVE, STEAMBOAT SPRINGS, COLORADO.

2. THIS MAP MEETS OR EXCEEDS THE NATIONAL MAP ACCURACY STANDARDS FOR 1"=20' SCALE MAPPING WITH A 1–FOOT CONTOUR INTERVAL.

3. NO BEARINGS ARE USED TO DENOTE DIRECTION ON THIS SURVEY.

4. THE LINEAL UNIT OF MEASURE IS THE U.S. SURVEY FOOT.

5. SITE BENCHMARK. TOP OF AN ALUMINUM CAP FOR THE NORTHWEST CORNER OF SECTION 27, T6N, R84W, SIXTH P.M. ELEVATION = 6931.45 (NGVD 29)

6. THIS SURVEY WAS PREPARED WITHOUT THE BENEFIT OF A TITLE POLICY OR TITLE COMMITMENT. THEREFORE MATTERS PERTAINING TO OWNERSHIP AND RECORDED EASEMENTS AND RIGHTS–OF–WAY ACROSS OR AFFECTING SAID PREMISES HAVE NOT BEEN SHOWN. ADDITIONALLY THIS SURVEY DOES NOT CONSTITUTE A TITLE SEARCH BY DREXEL, BARRELL & CO. TO DETERMINE OWNERSHIP AND EASEMENTS OF RECORD.

7. THE LOCATION OF UNDERGROUND UTILITIES IS BASED UPON MARKINGS PROVIDED BY UNDERGROUND UTILITY LOCATING CONSULTANTS, A UTILITY LOCATING SERVICE, MARKINGS PROVIDED BY LOCAL UTILITY COMPANIES AND LOCATIONS DERIVED FROM MAPS PROVIDED BY THE VARIOUS PUBLIC AND PRIVATE UTILITY COMPANIES COMBINED WITH VISIBLE SURFACE EVIDENCE OF SUCH UTILITIES. LOCATIONS MAY BE APPROXIMATE AND MUST BE VERIFIED PRIOR TO ANY CONSTRUCTION.

9. *** NOTE – INVERT ELEVATIONS LISTED FOR THE AREA DRAINS ARE APPROXIMATE. *** THE PROPERTY WAS SURVEYED IN THE MONTH OF DECEMBER. ICE IN THE BOTTOMS OF THE DRAINS MADE ACCURATE MEASUREMENTS IMPOSSIBLE.

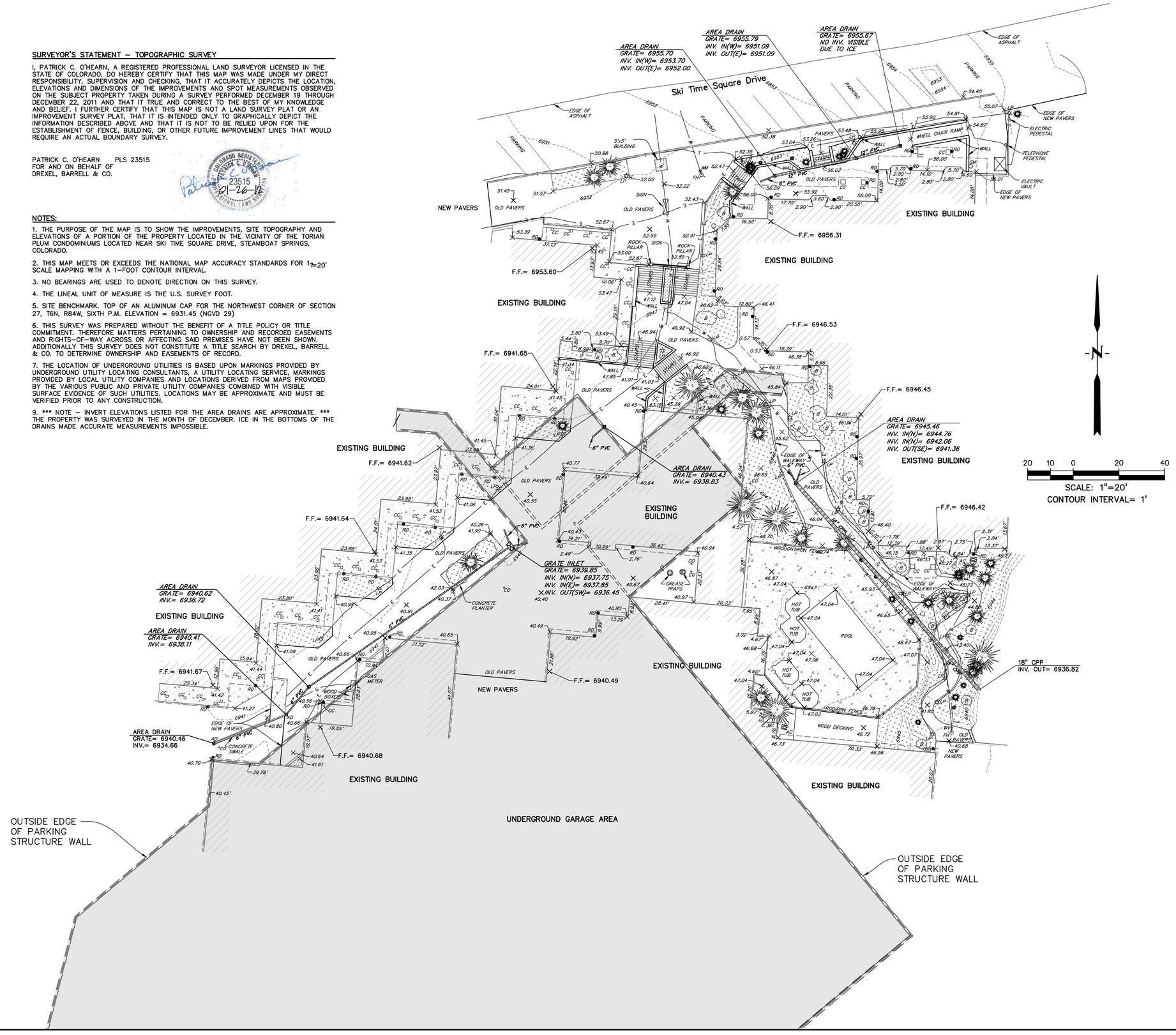

RCRBD

RECORD SET

LEGEND

EX. INTERMEDIATE CONTOUR	5364
EX. INDEX CONTOUR	5365
EX. SPOT ELEVATIONS	× 45.34
EX. FIRE HYDRANT	FH
EX. WATER VALVE	WV
EX. GAS METER	GM
EX. MANHOLE	MH
OVERHANG COLUMN	CC
EX. LIGHT POLE	LP
EX. SANITARY CLEANOUT	CO
EX. ROOF DRAIN	RD
FINISH FLOOR	FF
BUILDING OVERHANG	
EX. BURIED ELECTRIC LINE	E
EX BURIED TELEPHONE LINE	T
EX. GAS LINE	G
EX. WATER LINE	W
EX. DECIDUOUS TREE	
EX. CONIFEROUS TREE	
EX. DECIDUOUS BUSHES	
BUILDING HATCH	
CONCRETE HATCH	
LANDSCAPE AREA HATCH	
PARKING GARAGE HATCH	

MAP OF A TOPOGRAPHIC DESIGN SURVEY OF A PORTION OF THE TORIAN PLUM CONDOMINUMS LOCATED IN THE NW 1/4 OF SECTION 27, T6N, R84W, SIXTH P.M., STEAMBOAT SPRINGS, COLORADO.

IN ACCORDANCE WITH CRS 13–80–105:
NOTICE: ACCORDING TO COLORADO LAW YOU MUST COMMENCE ANY LEGAL ACTION BASED UPON ANY DEFECT IN THIS SURVEY WITHIN THREE YEARS AFTER YOU FIRST DISCOVER SUCH DEFECT. IN NO EVENT, MAY ANY ACTION BASED UPON ANY DEFECT IN THIS SURVEY BE COMMENCED MORE THAN TEN YEARS FROM THE DATE OF THE CERTIFICATION SHOWN HEREON.

Drexel, Barrell & Co. Engineers/Surveyors
1800 38TH STREET BOULDER, COLORADO 80301 (303) 442–4338
COLORADO SPRINGS, COLORADO (719) 260–0887
GRAND JUNCTION, COLORADO (970) 257–1350
STEAMBOAT SPRINGS, COLORADO (970) 879–1523

Revisions – Date	Date	Drawn By	Job No.
	01/26/2012	TLT	20375–00SSSV
	Scale 1"= 20'	Checked By PCO	Drawing No.

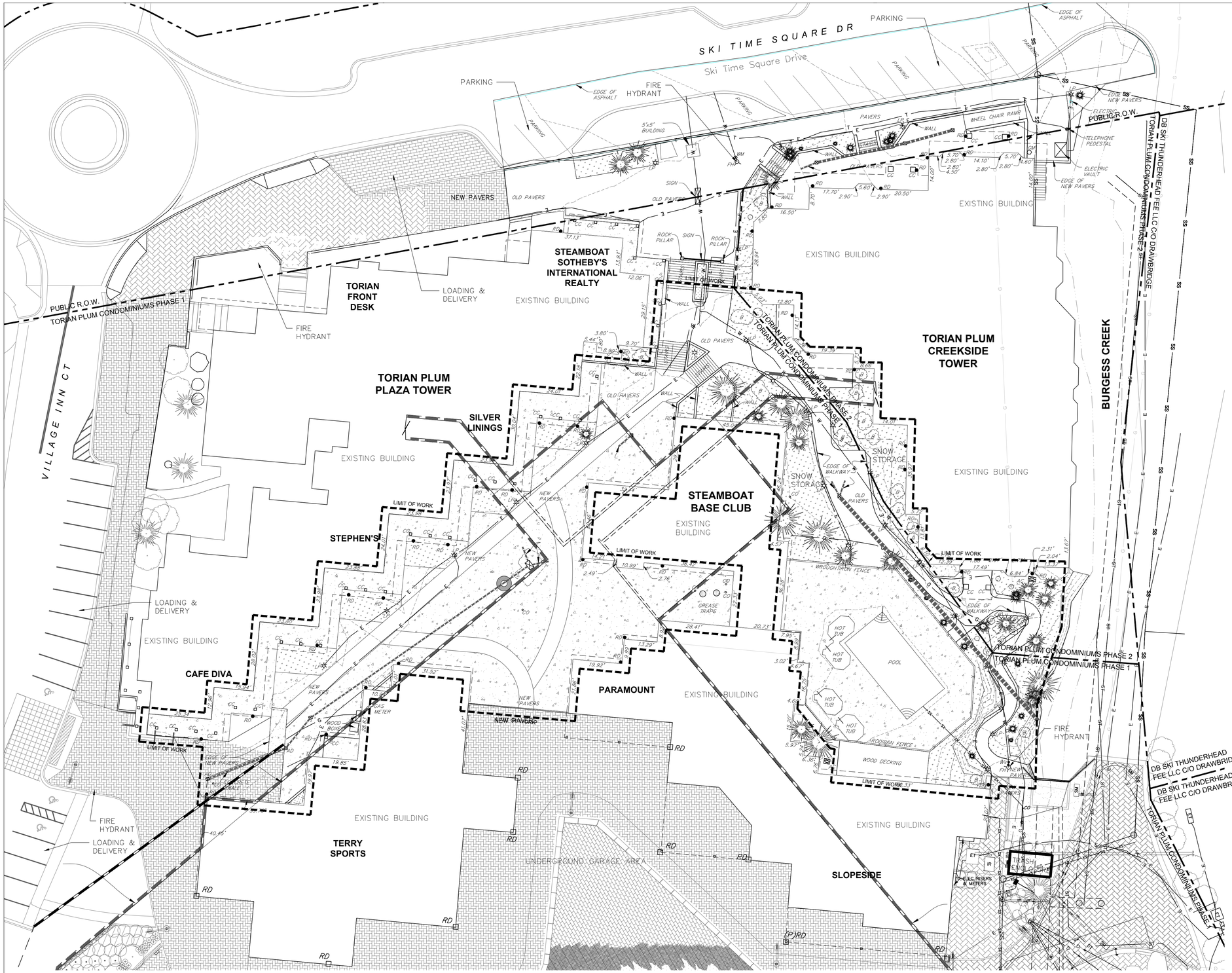

LEGEND

EX. INTERMEDIATE CONTOUR	5364
EX. INDEX CONTOUR	5365
EX. SPOT ELEVATIONS	
EX. FIRE HYDRANT	FH
EX. WATER VALVE	WV
EX. GAS METER	GM
EX. MANHOLE	MH
OVERHANG COLUMN	CC
EX. LIGHT POLE	LP
EX. SANITARY CLEANOUT	CO
EX. ROOF DRAIN	RD
FINISH FLOOR	FF
BUILDING OVERHANG	
EX. BURIED ELECTRIC LINE	
EX BURIED TELEPHONE LINE	
EX. GAS LINE	
EX. WATER LINE	
EX. DECIDUOUS TREE	
EX. CONIFEROUS TREE	
EX. DECIDUOUS BUSHES	
BUILDING HATCH	
CONCRETE HATCH	
LANDSCAPE AREA HATCH	
PARKING GARAGE	
STORM PIPE	
PROJECT BOUNDARY / LIMIT OF WORK	
LOT LINES / PROPERTY LINES	

RCRBD
RECORD SET

LOT / PARCEL #1
TORIAN PLUM CONDOMINIUMS PHASE 1 (276,230 SF)

LOT / PARCEL #2
TORIAN PLUM CONDOMINIUMS PHASE 2 (24,860 SF)

NORTH

0 10 20 40
SCALE: 1"=20'-0"

w e n k
ASSOCIATES
PLANNERS & LANDSCAPE ARCHITECTS
303.628.0003

JOSHUA J. CULWELL
985
10/25/2012
Original Date of Licensure
STATE OF COLORADO
LICENSED LANDSCAPE ARCHITECT

WATERPROOFING / RENOVATION - PHASE 2
TORIAN PLUM PARKING STRUCTURE
STEAMBOAT SPRINGS, CO

Date	10.22.18
Drawn By	BP
Reviewed by	JC
Job No.	16021.01

Revisions

Name	Date
1 DEV. PLAN #1	03/02/2018
2 BLDG DEPT #1	03/06/18

Issue:
100% Construction Documents

Sheet Title:
Existing Conditions Plan

Sheet Number
EC1.0

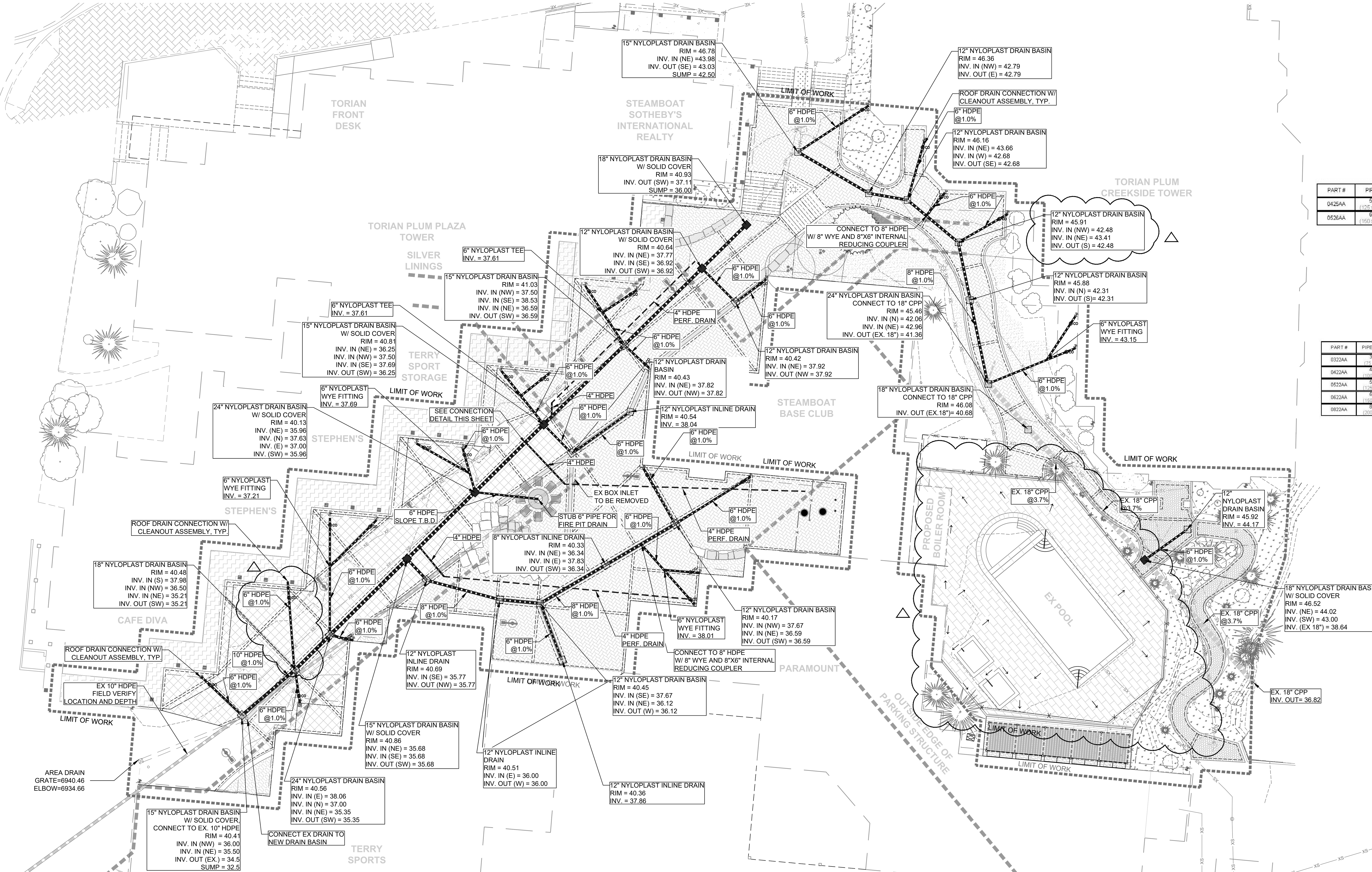

NORTH

20 0 20 40 60 Feet
(IN FEET)
1 inch = 20 ft.

RCRBD

RECORD SET

INTERNAL REDUCING COUPLER

PART #	PIPE SIZE	A	B
0425AA	5 x 4 in (125 x 100 mm)	8.8 in (222 mm)	5.9 in (149 mm)
0526AA	6 x 5 in (150 x 125 mm)	8.8 in (222 mm)	7.0 in (178 mm)

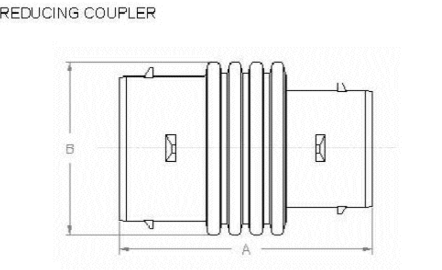

ADS INTERNAL REDUCING COUPLER

PART #	PIPE SIZE	A	B	C	D	E
0322AA	3 in (75 mm)	10.5 in (267 mm)	4.0 in (102 mm)	7.0 in (178 mm)	6.4 in (162 mm)	8.4 in (213 mm)
0422AA	4 in (100 mm)	11.6 in (295 mm)	5.1 in (130 mm)	7.6 in (194 mm)	7.3 in (184 mm)	9.8 in (248 mm)
0522AA	5 in (125 mm)	13.6 in (346 mm)	6.3 in (159 mm)	9.3 in (235 mm)	8.8 in (222 mm)	11.9 in (302 mm)
0622AA	6 in (150 mm)	16.0 in (406 mm)	7.4 in (187 mm)	11.1 in (283 mm)	11.4 in (289 mm)	14.1 in (359 mm)
0822AA	8 in (200 mm)	19.3 in (489 mm)	10.0 in (254 mm)	13.5 in (343 mm)	14.9 in (378 mm)	18.8 in (476 mm)

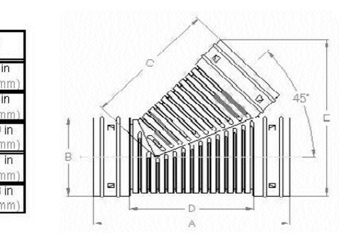

ADS SINGLE WALL WYE FITTING

LEGEND:

PROPOSED STORM SEWER W/ AREA INLET
PROPOSED TRENCH DRAIN
EXISTING STORM SEWER W/ AREA DRAIN
EXISTING SAN SEWER MAIN/SERVICE W/ MANHOLE AND CLEANOUT
PROPOSED SAN SEWER SERVICE

NOTES:

1. THE SIZE, TYPE AND LOCATION OF ALL KNOWN UNDERGROUND UTILITIES ARE APPROXIMATE WHEN SHOWN ON THESE DRAWINGS. IT SHALL BE THE RESPONSIBILITY OF THE CONTRACTOR TO VERIFY THE EXISTENCE OF ALL UNDERGROUND UTILITIES IN THE AREA OF THE WORK. BEFORE COMMENCING NEW CONSTRUCTION, THE CONTRACTOR SHALL BE RESPONSIBLE FOR LOCATING ALL UNDERGROUND UTILITIES AND SHALL BE RESPONSIBLE FOR ALL UNKNOWN UNDERGROUND UTILITIES.
2. EXISTING UNDERGROUND AND OVERHEAD PUBLIC AND PRIVATE UTILITIES AS SHOWN ARE INDICATED ACCORDING TO THE BEST INFORMATION MADE AVAILABLE TO THE ENGINEER. THE ENGINEER DOES NOT GUARANTEE NOR IS RESPONSIBLE FOR THE ACCURACY OF SUCH INFORMATION. EXISTING UTILITY MAINS AND SERVICES MAY NOT BE STRAIGHT LINES OR AS INDICATED ON THESE DRAWINGS. CONTRACTOR TO VERIFY EXISTING HORIZONTAL AND VERTICAL LOCATIONS PRIOR TO CONSTRUCTION.
3. ALL STORM SEWER CONSTRUCTION SHALL BE PER CITY OF STEAMBOAT SPRINGS STANDARD SPECIFICATIONS, LATEST EDITION.
4. THE PARTICLE SIZE OF BACKFILL MATERIAL WITHIN 1 FOOT OF THE PIPE SHALL NOT EXCEED 1/2 INCH. ALL MATERIALS USED FOR BACKFILL SHALL BE FREE FROM REFUSE ORGANIC MATERIAL, COBBLES, BOULDERS, LARGE ROCKS OR STONES OR FROZEN SOILS GREATER THAN 6-INCHES IN DIAMETER.
5. ALL TRENCHES SHALL BE COMPACTED TO 95% AS DETERMINED BY ASTM D698 (STANDARD PROCTOR).

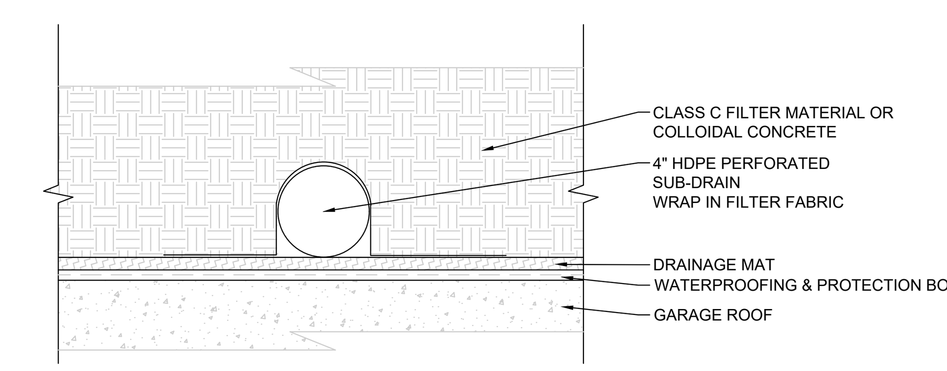

PERFORATED SUB-DRAIN
SCALE = N.T.S.

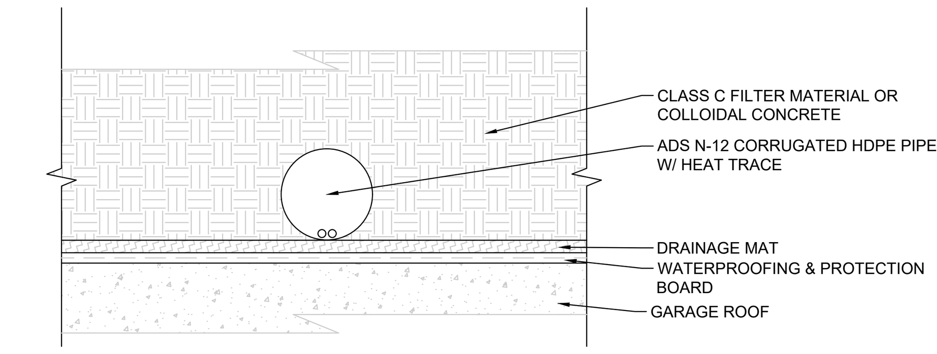

STORM DRAIN
SCALE = N.T.S.

REMOVED TRENCH DRAIN DETAIL

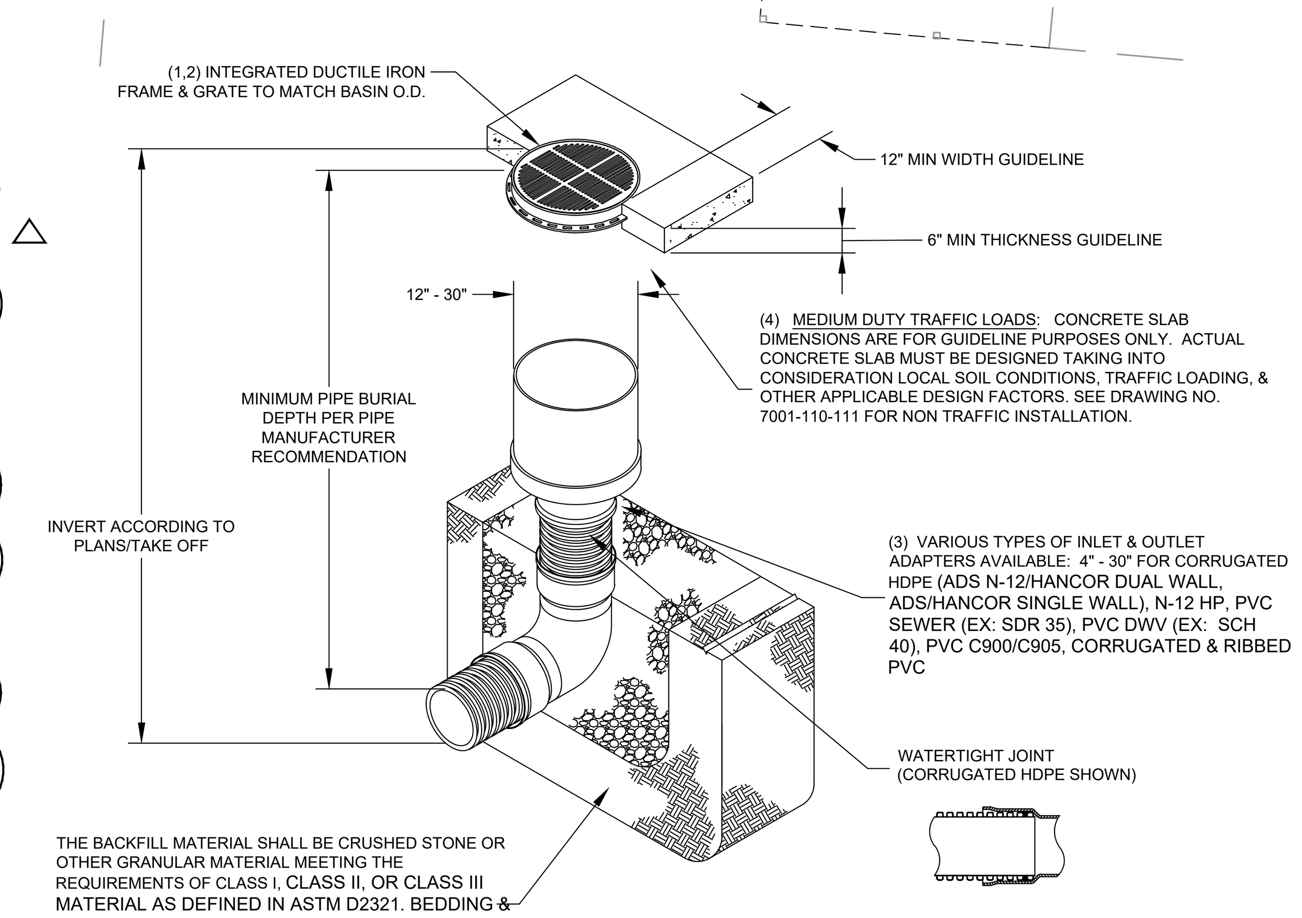

THE BACKFILL MATERIAL SHALL BE CRUSHED STONE OR OTHER GRANULAR MATERIAL MEETING THE REQUIREMENTS OF CLASS I, CLASS II, OR CLASS III MATERIAL AS DEFINED IN ASTM D2321. BEDDING & BACKFILL FOR SURFACE DRAINAGE INLETS SHALL BE PLACED & COMPACTED UNIFORMLY IN ACCORDANCE WITH ASTM D2321.

1 - 12" - 30" PEDESTRIAN GRATES SHALL BE DUCTILE IRON PER ASTM A536 GRADE 70-50-05.
2 - 12" - 30" FRAMES SHALL BE DUCTILE IRON PER ASTM A536 GRADE 70-50-05.
3 - DRAINAGE CONNECTION STUB JOINT TIGHTNESS SHALL CONFORM TO ASTM D3212 FOR CORRUGATED HDPE (ADS N-12/HANCOR DUAL WALL), N-12 HP, & PVC SEWER (4" - 24").
4 - 12" - 24" PEDESTRIAN GRATES SHALL MEET H-10 LOAD RATING. 30" PEDESTRIAN GRATE SHALL MEET H-20 LOAD RATING (SEE DRAWING NO. 7003-110-022 FOR H-20 TRAFFIC LOAD GUIDELINES).

NYLOPLAST INLINE DRAIN WITH PEDESTRIAN GRATE

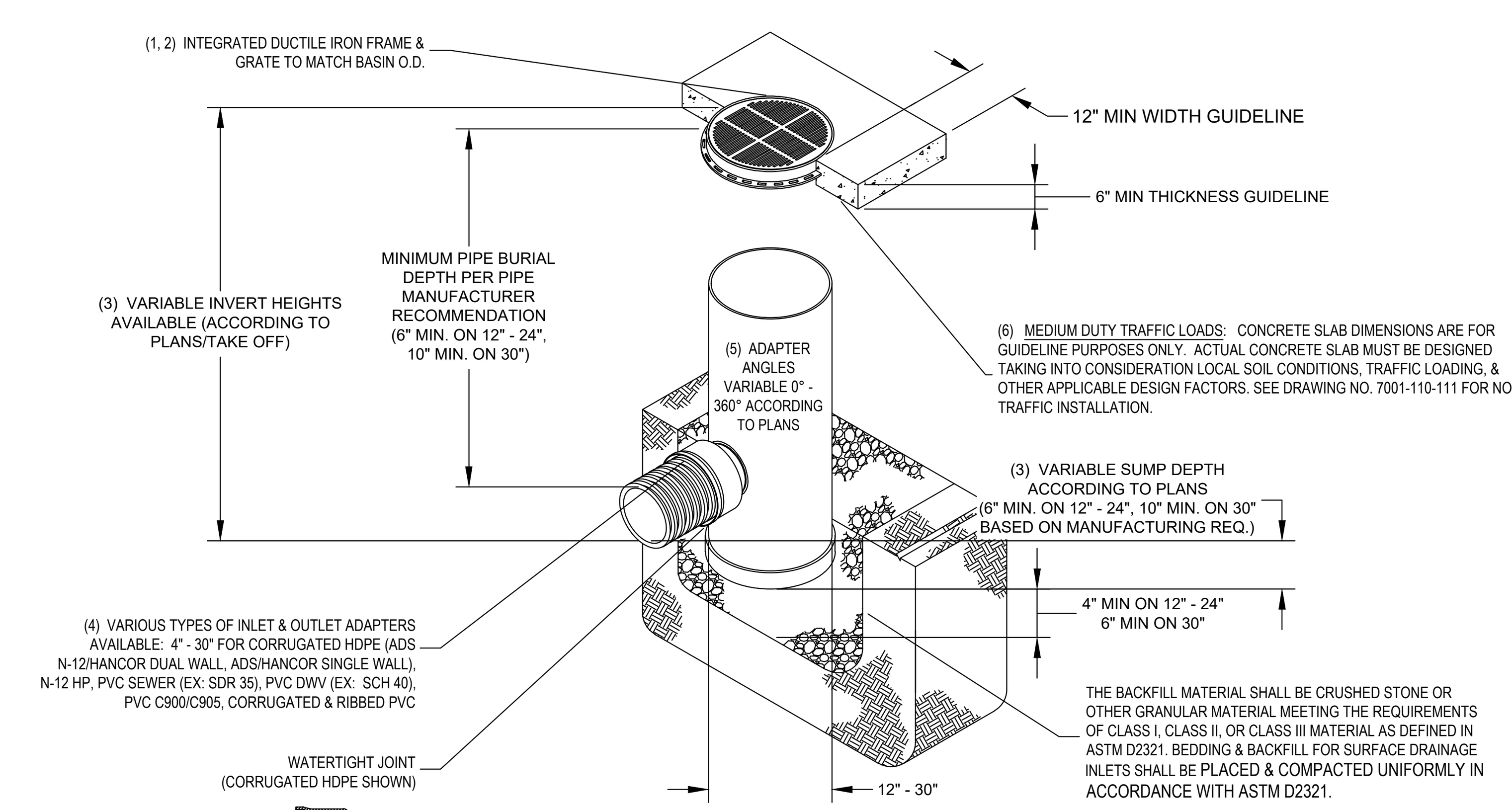

THE BACKFILL MATERIAL SHALL BE CRUSHED STONE OR OTHER GRANULAR MATERIAL MEETING THE REQUIREMENTS OF CLASS I, CLASS II, OR CLASS III MATERIAL AS DEFINED IN ASTM D2321. BEDDING & BACKFILL FOR SURFACE DRAINAGE INLETS SHALL BE PLACED & COMPACTED UNIFORMLY IN ACCORDANCE WITH ASTM D2321.

NYLOPLAST DRAIN WITH PEDESTRIAN GRATE

1 - 12" - 30" PEDESTRIAN GRATES SHALL BE DUCTILE IRON PER ASTM A536 GRADE 70-50-05.
2 - 12" - 30" FRAMES SHALL BE DUCTILE IRON PER ASTM A536 GRADE 70-50-05.
3 - DRAIN BASIN TO BE CUSTOM MANUFACTURED ACCORDING TO PLAN DETAILS. RISERS ARE NEEDED FOR BASINS OVER 84" DUE TO SHIPPING RESTRICTIONS. SEE DRAWING NO. 7001-110-065.
4 - DRAINAGE CONNECTION STUB JOINT TIGHTNESS SHALL CONFORM TO ASTM D3212 FOR CORRUGATED HDPE (ADS N-12/HANCOR DUAL WALL), N-12 HP, & PVC SEWER (4" - 24").
5 - ADAPTERS CAN BE MOUNTED 0° TO 360°. TO DETERMINE MINIMUM ANGLE BETWEEN ADAPTERS SEE DRAWING NO. 7001-110-012.
6 - 12" - 24" PEDESTRIAN GRATES SHALL MEET H-10 LOAD RATING. 30" PEDESTRIAN GRATE SHALL MEET H-20 LOAD RATING (SEE DRAWING NO. 7001-110-144 FOR H-20 TRAFFIC LOAD GUIDELINES).

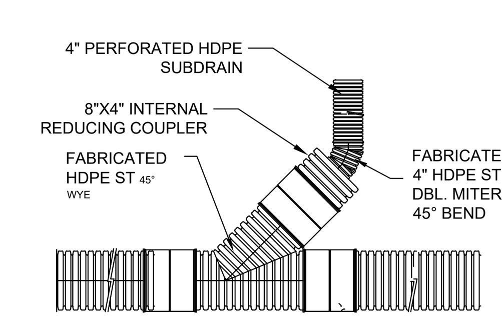

SUBDRAIN CONNECTION TO MAIN DRAIN

NOTE:
FABRICATED FITTINGS ARE AVAILABLE IN TEES, WYES, REDUCERS, 45° BENDS.

WATERTIGHT (WT) JOINTS SHOWN. SOIL-TIGHT (ST) FITTINGS ARE ALSO AVAILABLE.

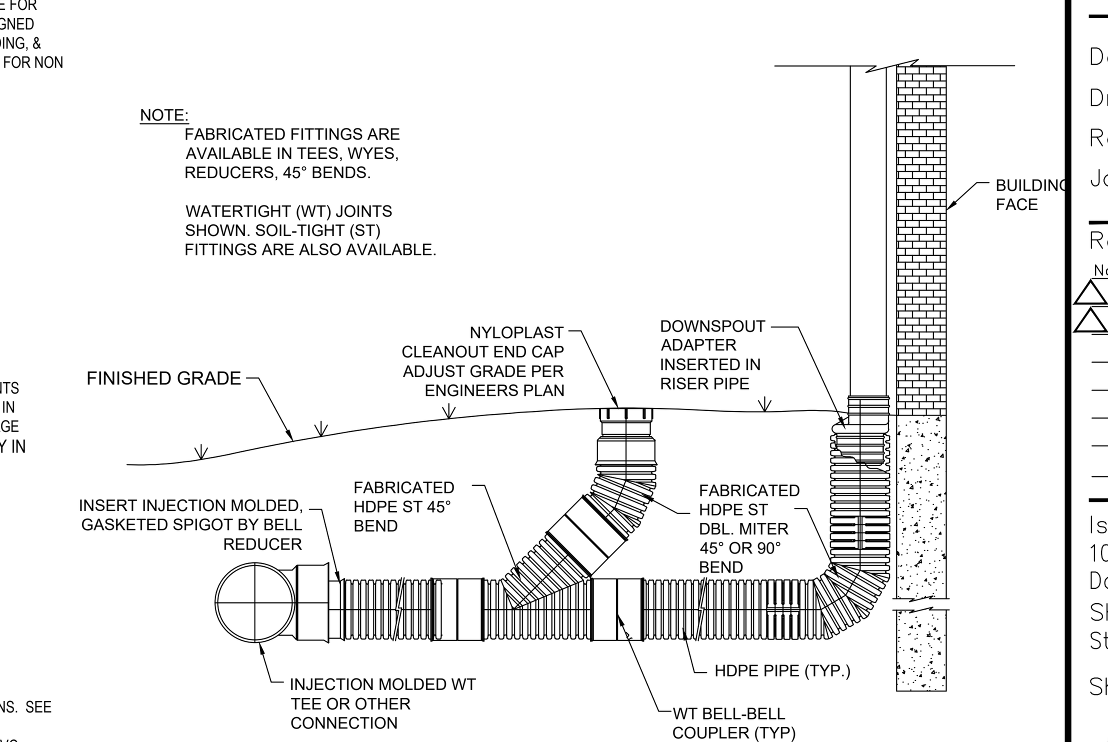

ROOFDRAIN W/ 45° WYE CLEANOUT AND FITTING

w e n k
ASSOCIATES
PLANNERS & LANDSCAPE ARCHITECTS
303.628.0003

LANDMARK CONSULTANTS, INC.
CIVIL ENGINEERS | SURVEYORS
141 9th Street ~ P.O. Box 774943
Steamboat Springs, Colorado 80477
(970) 871-9494 www.LANDMARK-CO.com

COLORADO LICENSED PROFESSIONAL ENGINEER
DEBORAH CHRISTINE SPAUSTAT
41286
03/06/2018

NOT VALID WITHOUT ORIGINAL SIGNATURE AND DATE

WATERPROOFING / RENOVATION – PHASE 2
TORIAN PLUM PARKING STRUCTURE
STEAMBOAT SPRINGS, CO

Date 10.22.18
Drawn By BP
Reviewed by JC
Job No. 16021.01

Revisions

Name	Date
BLDG DEPT #1	03/06/18
BLDG DEPT #2	04/16/18

Issue:
100% Construction Documents
Sheet Title:
Storm Sewer Plan
Sheet Number
C1.0

RCRBD

RECORD SET

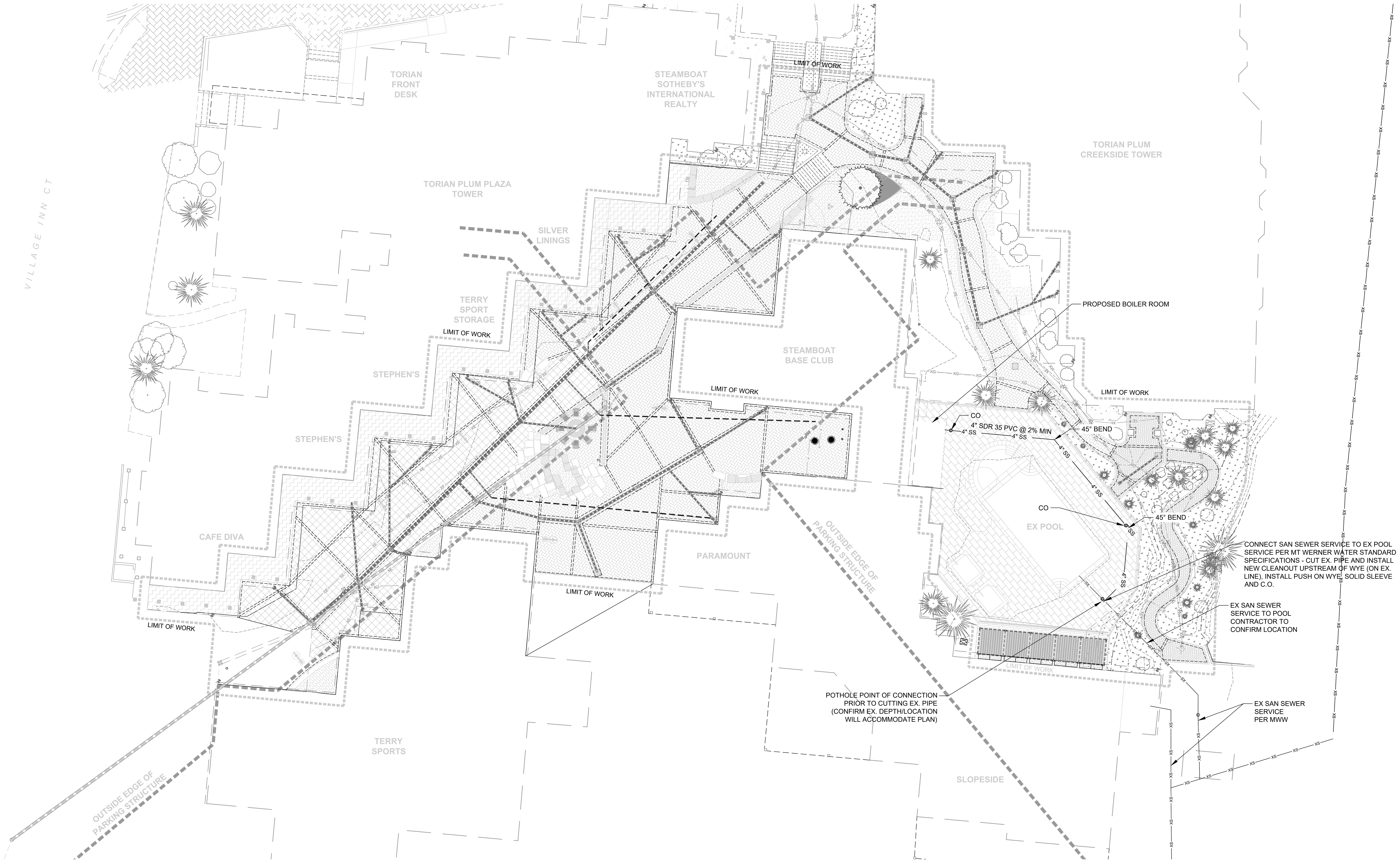

LEGEND:

- PROPOSED STORM SEWER W/ AREA INLET
- PROPOSED TRENCH DRAIN
- EXISTING STORM SEWER W/ AREA DRAIN
- EXISTING SAN SEWER MAIN/SERVICE W/ MANHOLE AND CLEANOUT
- PROPOSED SAN SEWER SERVICE W/ CLEANOUT

NOTES:

1. THE SIZE, TYPE AND LOCATION OF ALL KNOWN UNDERGROUND UTILITIES ARE APPROXIMATE WHEN SHOWN ON THESE DRAWINGS. IT SHALL BE THE RESPONSIBILITY OF THE CONTRACTOR TO VERIFY THE EXISTENCE OF ALL UNDERGROUND UTILITIES IN THE AREA OF THE WORK. BEFORE COMMENCING NEW CONSTRUCTION, THE CONTRACTOR SHALL BE RESPONSIBLE FOR LOCATING ALL UNDERGROUND UTILITIES AND SHALL BE RESPONSIBLE FOR ALL UNKNOWN UNDERGROUND UTILITIES.
2. EXISTING UNDERGROUND AND OVERHEAD PUBLIC AND PRIVATE UTILITIES AS SHOWN ARE INDICATED ACCORDING TO THE BEST INFORMATION MADE AVAILABLE TO THE ENGINEER. THE ENGINEER DOES NOT GUARANTEE NOR IS RESPONSIBLE FOR THE ACCURACY OF SUCH INFORMATION. EXISTING UTILITY MAINS AND SERVICES MAY NOT BE STRAIGHT LINES OR AS INDICATED ON THESE DRAWINGS. CONTRACTOR TO VERIFY EXISTING HORIZONTAL AND VERTICAL LOCATIONS PRIOR TO CONSTRUCTION.
3. ALL STORM SEWER CONSTRUCTION SHALL BE PER CITY OF STEAMBOAT SPRINGS STANDARD SPECIFICATIONS, LATEST EDITION.
4. THE PARTICLE SIZE OF BACKFILL MATERIAL WITHIN 1 FOOT OF THE PIPE SHALL NOT EXCEED 3/4-INCH. ALL MATERIALS USED FOR BACKFILL SHALL BE FREE FROM REFUSE ORGANIC MATERIAL, COBBLES, BOULDERS, LARGE ROCKS OR STONES OR FROZEN SOILS GREATER THAN 6-INCHES IN DIAMETER.
5. ALL TRENCHES SHALL BE COMPACTED TO 95% AS DETERMINED BY ASTM D698 (STANDARD PROCTOR).

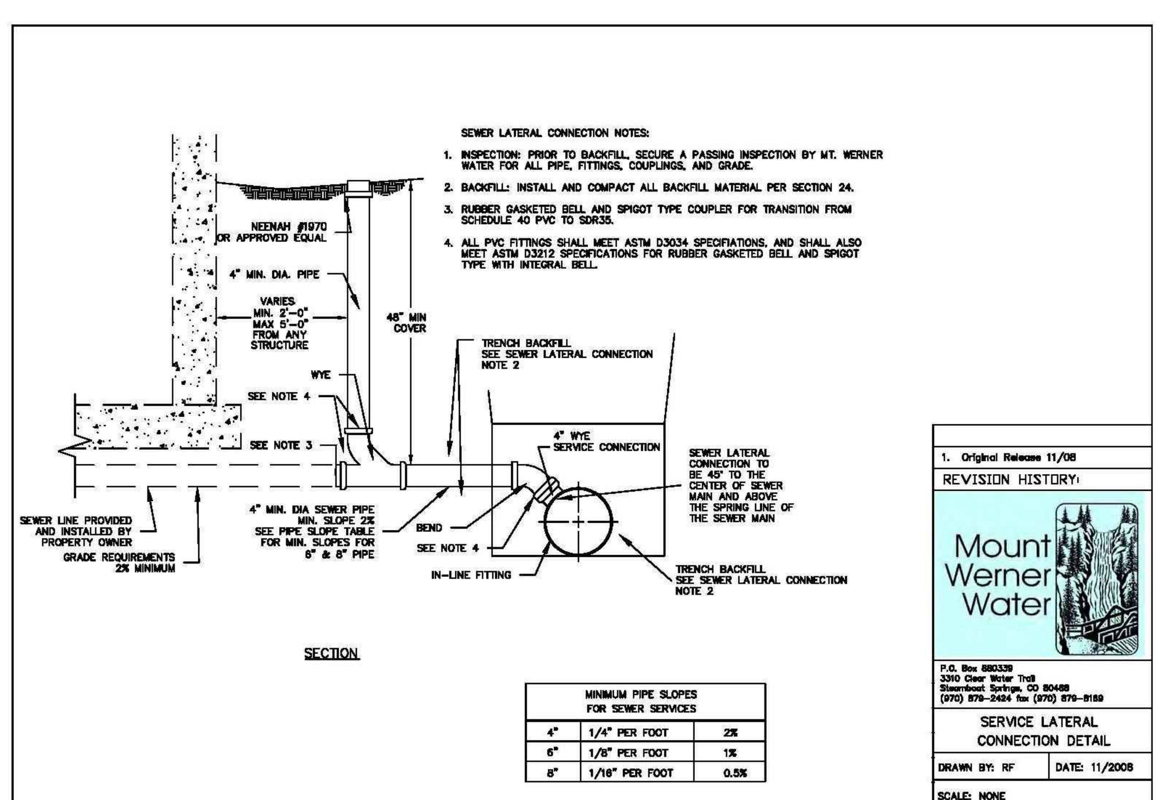

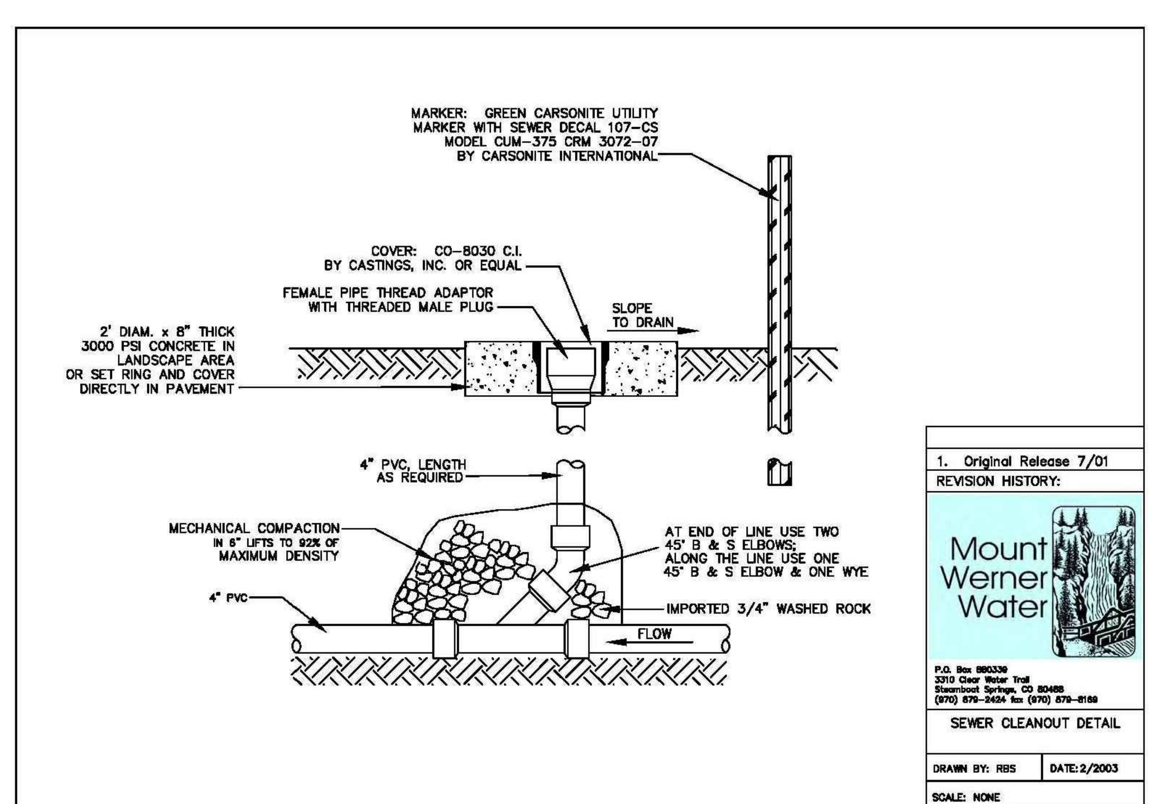

wenk ASSOCIATES
PLANNERS & LANDSCAPE ARCHITECTS
303.628.0003

LANDMARK CONSULTANTS, INC.
CIVIL ENGINEERS | SURVEYORS
141 9th Street ~ P.O. Box 774943
Steamboat Springs, Colorado 80477
(970) 871-9494 www.LANDMARK-CO.com

COLORADO LICENSED PROFESSIONAL ENGINEER
41286
03/06/2018
NOT VALID WITHOUT ORIGINAL SIGNATURE AND DATE

WATERPROOFING / RENOVATION — PHASE 2
TORIAN PLUM PARKING STRUCTURE
STEAMBOAT SPRINGS, CO

Date 10.22.18
Drawn By BP
Reviewed by JC
Job No. 16021.01

Revisions

Name	Date
BLDG DEPT #1	03/06/18
BLDG DEPT #2	04/16/18

Issue: 100% Construction Documents
Sheet Title: Sanitary Sewer Plan
Sheet Number
C2.0

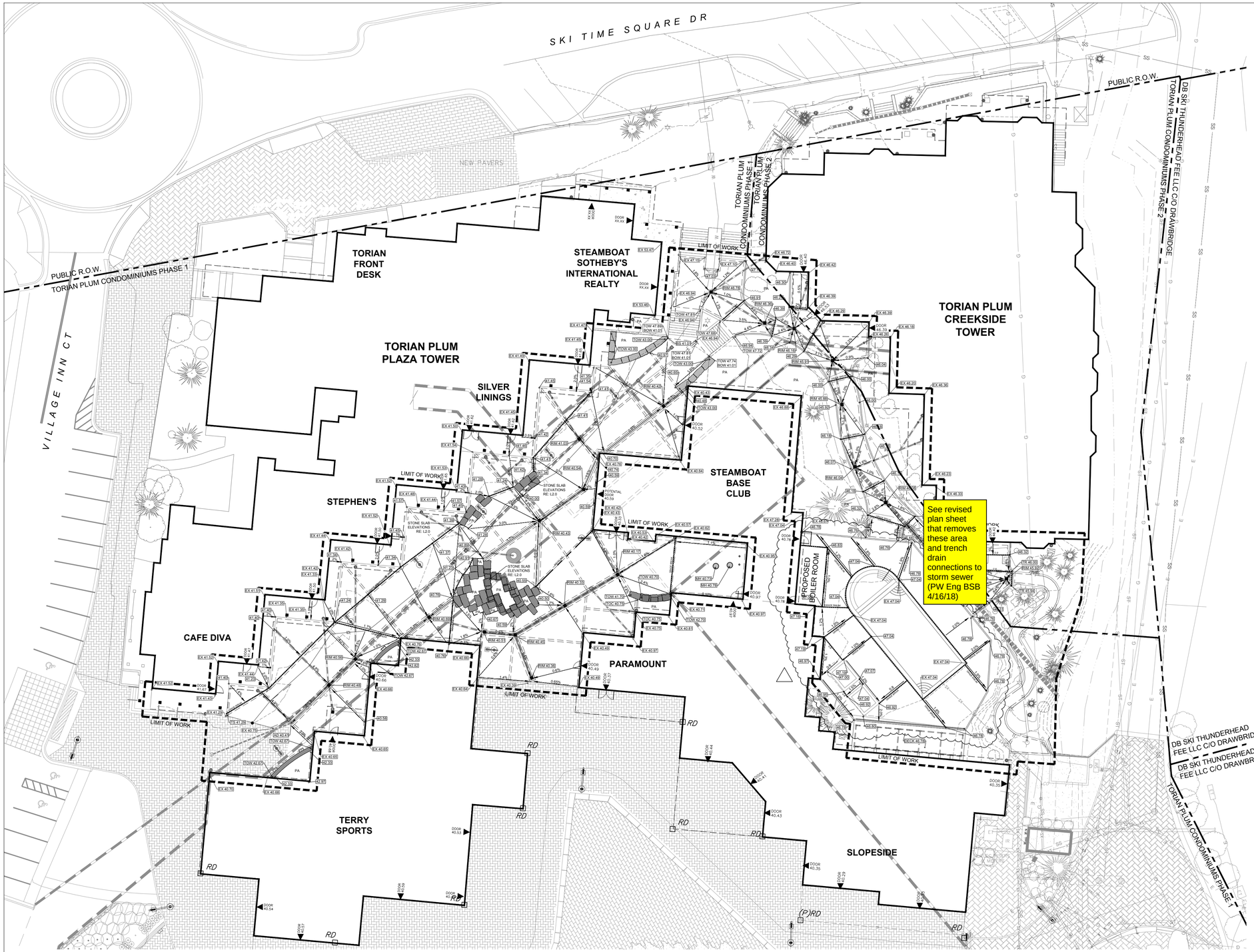

GRADING AND DRAINAGE NOTES

1. CONTRACTOR SHALL BE RESPONSIBLE FOR NOTIFYING OWNER'S REPRESENTATIVE OF ANY DISCREPANCIES BETWEEN FIELD CONDITIONS AND PLANS FOR BACK OF CURB ELEVATIONS, BUILDING FIRST FLOOR ELEVATIONS, ETC.
2. PAVED AREAS SHALL HAVE A MAXIMUM SLOPE OF 5% ON THE SURFACE IN DIRECTION OF TRAVEL AND 2% CROSS SLOPE UNLESS OTHERWISE SPECIFIED.
3. CONTRACTOR SHALL BE RESPONSIBLE FOR MAINTAINING POSITIVE DRAINAGE AT ALL TIMES DURING CONSTRUCTION.
4. ALL FINISHED HARDSCAPE AND LANDSCAPE AREAS SHALL BE SLOPED TO MAINTAIN POSITIVE DRAINAGE AWAY FROM BUILDINGS AND TOWARD DRAINAGE INLETS AND FACILITIES.
5. GRADES IN LANDSCAPE AREAS SHALL SLOPE A MINIMUM OF 2% AND A MAXIMUM OF 3:1 UNLESS OTHERWISE NOTED OR APPROVED.
6. FEATHER ALL FINISH GRADES TO MEET EXISTING GRADES WITHOUT ABRUPT CHANGES IN SLOPE.
7. CONTRACTOR SHALL STABILIZE AND MAINTAIN EXISTING SLOPES AND GRADES AS REQUIRED AND/OR AS DIRECTED BY THE OWNER'S REPRESENTATIVE. CONTRACTOR SHALL REPAIR ANY DAMAGE CAUSED BY EROSION OR SLOPE FAILURE AT NO ADDITIONAL COST TO THE OWNER.

BENCHMARK
TOP OF AN ALUMINUM CAP FOR THE NORTHWEST CORNER OF SECTION 27, T6N, R84W, SIXTH P.M. ELEVATION = 6913.45 (NGVD 29)

DESIGN TEAM ASSUMES NO RESPONSIBILITY FOR UTILITY LOCATIONS. THE UTILITIES SHOWN ON THIS DRAWING HAVE BEEN PLOTTED FROM THE BEST AVAILABLE INFORMATION. IT IS, HOWEVER, THE CONTRACTORS RESPONSIBILITY TO FIELD VERIFY THE SIZE, MATERIAL, HORIZONTAL AND VERTICAL LOCATION OF ALL UTILITIES PRIOR TO THE COMMENCEMENT OF ANY CONSTRUCTION.

GRADING LEGEND

GRADE BREAK — GRADE BREAK	PROP. CONTOUR – MAJOR	2.5% SLOPE (PERCENT)	TOW XX.XX TOP OF WALL	RIM XX.XX DRAIN RIM ELEV.	BUILDING EDGE	PA PLANTING AREA
RIDGELINE — RIDGE LINE	PROP. CONTOUR – MINOR	3:1 SLOPE (FT:FT)	TOC XX.XX TOP OF CURB	ME XX.XX MEET EX. GRADE	BUILDING OVERHANG	LIMIT OF WORK
EX. CONTOUR	CONTOUR TIE IN	DOOR 41.55 FIRST FLOOR ELEV.	EX 40.49 EXISTING GRADE	HP XX.XX HIGH POINT	TRENCH DRAIN PREFABRICATED	PARKING GARAGE
			MH 40.78 MANHOLE ELEV.	LP XX.XX LOW POINT		STORM PIPE
			STORM INLET	XX.XX SPOT GRADE		

NORTH

0 10 20 40
SCALE: 1"=20'-0"

weink
ASSOCIATES
PLANNERS & LANDSCAPE ARCHITECTS
303.828.0003

JOSHUA J. CULWELL
985
10/25/2012
Original Date of Licensure
09.06.18
STATE OF COLORADO
LICENSED LANDSCAPE ARCHITECT

WATERPROOFING / RENOVATION - PHASE 2
TORIAN PLUM PARKING STRUCTURE
STEAMBOAT SPRINGS, CO

Date 10.22.18
Drawn By BP
Reviewed by JC
Job No. 16021.01

Revisions

Name	Date
BLDG DEPT #1	03/06/18
BLDG DEPT #2	04/XX/18

Issue:
100% Construction Documents

Sheet Title:
Grading Plan

Sheet Number
G1.0

RCRBD

RECORD SET

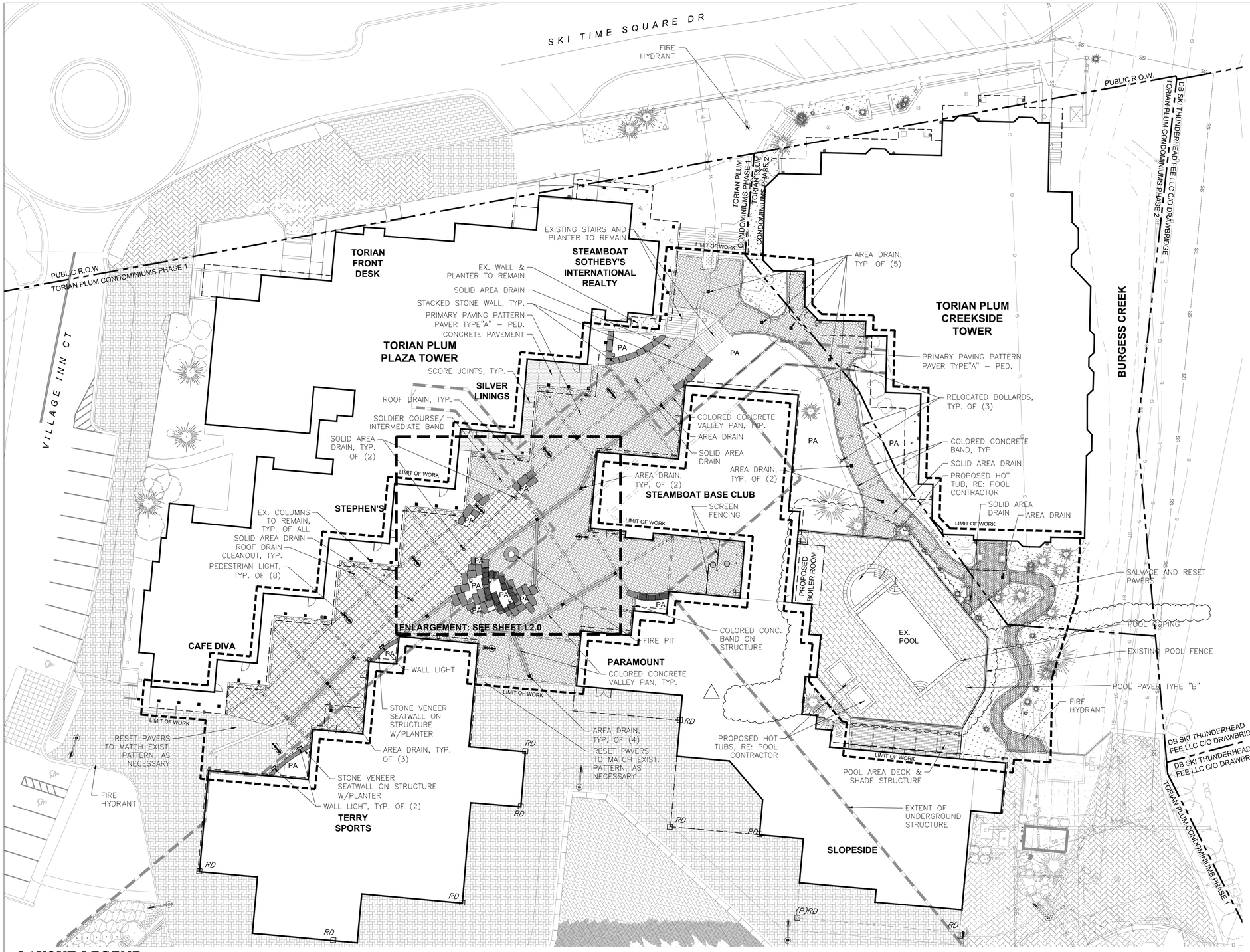

LAYOUT LEGEND

CONCRETE UNIT PAVERS– PEDESTRIAN TYPE "A"	CONCRETE UNIT PAVERS– VEHICULAR TYPE "A"	POOL AREA DECK & SHADE STRUCTURE	STONE VENEER WALL	COLORED CONCRETE BAND	SOLID AREA DRAIN	EXISTING ROOF DRAIN	PAVER RESTRAINT	PEDESTRIAN LIGHT POLE	EXISTING BOLLARD LIGHT– RELOCATE
CONCRETE UNIT PAVERS– SECONDARY	SALVAGE & RESET PAVERS	POOL COPING	STONE SLABS– 1ST LAYER	COLORED CONCRETE VALLEY PAN	AREA DRAIN	TRENCH DRAIN PREFABRICATED	BUILDING EDGE	WALL LIGHT / POOL FENCE LIGHT	ELECTRIC CONDUIT & LINE HEAT TRACE AT ROOF DRAINS
CONCRETE UNIT PAVERS– POOL TYPE "B"	CONCRETE PAVEMENT	SOLDIER COURSE/ INTERMEDIATE BAND	STONE SLABS– 2ND LAYER	POOL FENCE	SCREEN FENCE	STORM CLEAN OUT	BUILDING OVERHANG	EVENT RECEPTACLE	PA PLANTING AREA

NORTH

0 10 20 40

SCALE: 1"=20'–0"

LAYOUT AND MATERIALS NOTES

1. DO NOT SCALE THE PLANS. DIMENSIONS SUPERSEDE DRAWING SCALES. VERIFY LAYOUT PRIOR TO EXCAVATION.
2. DIMENSIONS ARE DRAWN TO FACE OF CURB, WALL, AND EDGE UNLESS OTHERWISE SPECIFIED.
3. IF THERE IS A DISCREPANCY BETWEEN THE PLANS AND SPECIFICATIONS, THE SPECIFICATIONS WILL SUPERSEDE PLANS.
4. CONTRACTOR TO CLEARLY STAKE ALL CORNERS OF PAVED AREAS FOR OWNER'S REPRESENTATIVE'S APPROVAL PRIOR TO SETTING EDGES OR FORMS.
5. OBTAIN APPROVAL OF OWNER'S REPRESENTATIVE FOR ALL FORM WORK AT LEAST 24 HOURS PRIOR TO PLACING CURBS, FOUNDATIONS, OR PAVEMENTS.
6. CONTRACTOR TO PROVIDE EXPANSION JOINT AND SCORE JOINT LAYOUT PLAN FOR APPROVAL BY LANDSCAPE ARHICTECT/OWNER'S REPRESENTATIVE PRIOR TO CONSTRUCTION.

SITE DETAIL KEYNOTES

PAVING	DTL/SHT
CONCRETE PAVEMENT	01/L3.0
CONCRETE PAVEMENT - ON STRUCTURE	02/L3.0
CONCRETE UNIT PAVERS - OFF STRUCTURE	03/L3.0
CONCRETE UNIT PAVERS - ON STRUCTURE	04/L3.0
CONCRETE UNIT PAVERS - TRANSITION OFF STRCT	02/L3.7
CONCRETE PAVERS @ POOL	05/L3.0
CONCRETE PAVERS - VEHICULAR	06/L3.0
COLORED CONCRETE BAND - OFF STRUCTURE	09/L3.0
COLORED CONCRETE BAND - ON STRUCTURE	10/L3.0
PAVING PATTERN - PRIMARY	11/L3.0
PAVING PATTERN - POOL AREA	12/L3.0
POOL COPING	03/L3.7

STAIRS, WALLS, FOOTINGS, CURBS, STEPS	
STACKED STONE SLAB WALL - OFF STRUCTURE	02/L3.1
STACKED STONE SLAB WALL - ON STRUCTURE	04/L3.1
STONE VENEER PLANTER WALL - OFF STRUCTURE	01/L3.2
STONE VENEER PLANTER WALL - ON STRUCTURE	02/L3.2
STONE VENEER WALL - OFF STRUCTURE	03/L3.2
CONCRETE BASE FOR ENTRY GATEWAY	01/L3.4
STONE VENEER LIGHT POLE BASE - OFF STRUCTURE	02/L3.4
STONE VENEER LIGHT POLE BASE - ON STRUCTURE	03/L3.4
COLORED CONCRETE STEP	N/A

SITE AMENITIES	
FIRE PIT	04/L3.7
POOL AREA DECK AND SHADE STRUCTURE	01/L3.5
POOL FENCE - EXISTING	01/L3.6
POOL SIDE PLANTER	01/L3.7
SCREEN FENCING	01/L3.3

SITE LIGHTING	
PEDESTRIAN LIGHT	04/L3.4
PEDESTRIAN LIGHT - STRUCTURE	05/L3.4
STONE VENEER WALL LIGHT	05/L3.2
EVENT RECEPTACLE	04/L3.2
POOL FENCE LIGHT	N/A

DRAINAGE	
AREA DRAIN	06/L3.1
COLORED CONC. VALLEY PAN - OFF STRUCTURE	07/L3.0
COLORED CONC. VALLEY PAN - ON STRUCTURE	08/L3.0

PLANTING	
TREE PLANTING	01/L3.8
ORNAMENTAL GRASS / PERENNIAL PLANTING	02/L3.8
INTENSIVE GARDEN ROOF ASSEMBLY	03/L3.8
LANDSCAPE PLANTER - ON STRUCTURE	04/L3.8
SHRUB PLANTING	05/L3.8

LOT / PARCEL #1
TORIAN PLUM CONDOMINIUMS PHASE 1 (276,230 SF)

LOT / PARCEL #2
TORIAN PLUM CONDOMINIUMS PHASE 2 (24,860 SF)

PHASING
THE PROJECT IS ONE PHASE AND WILL BE CONSTRUCTED IN A SERIES OF PHASES FROM SPRING/SUMMER 2018 TO FALL/WINTER 2018

BENCHMARK
TOP OF AN ALUMINUM CAP FOR THE NORTHWEST CORNER OF SECTION 27, T6N, R84W, SIXTH P.M. ELEVATION = 6913.45 (NGVD 29)

DESIGN TEAM ASSUMES NO RESPONSIBILITY FOR UTILITY LOCATIONS. THE UTILITIES SHOWN ON THIS DRAWING HAVE BEEN PLOTTED FROM THE BEST AVAILABLE INFORMATION. IT IS, HOWEVER, THE CONTRACTORS RESPONSIBILITY TO FIELD VERIFY THE SIZE, MATERIAL, HORIZONTAL AND VERTICAL LOCATION OF ALL UTILITIES PRIOR TO THE COMMENCEMENT OF ANY CONSTRUCTION.

w e n k
ASSOCIATES
PLANNERS & LANDSCAPE ARCHITECTS
303.628.0003

JOSHUA J. CULWELL 985
10/25/2012
Original Date of Licensure
STATE OF COLORADO
LICENSED LANDSCAPE ARCHITECT

WATERPROOFING / RENOVATION - PHASE 2
TORIAN PLUM PARKING STRUCTURE
STEAMBOAT SPRINGS, CO

Date 10.22.18
Drawn By BP
Reviewed by JC
Job No. 16021.01

Revisions

Name	Date
ADDENDUM A	01/05/18
ADDENDUM 4	01/19/18
△ DEV. PLAN #1	03/02/2018
△ BLDG DEPT #1	03/06/18
△ DEV. PLAN #2	03/30/18
△ BLDG DEPT #2	04/13/18

Issue:
100% Construction Documents

Sheet Title:
Layout & Materials

Sheet Number
L1.0

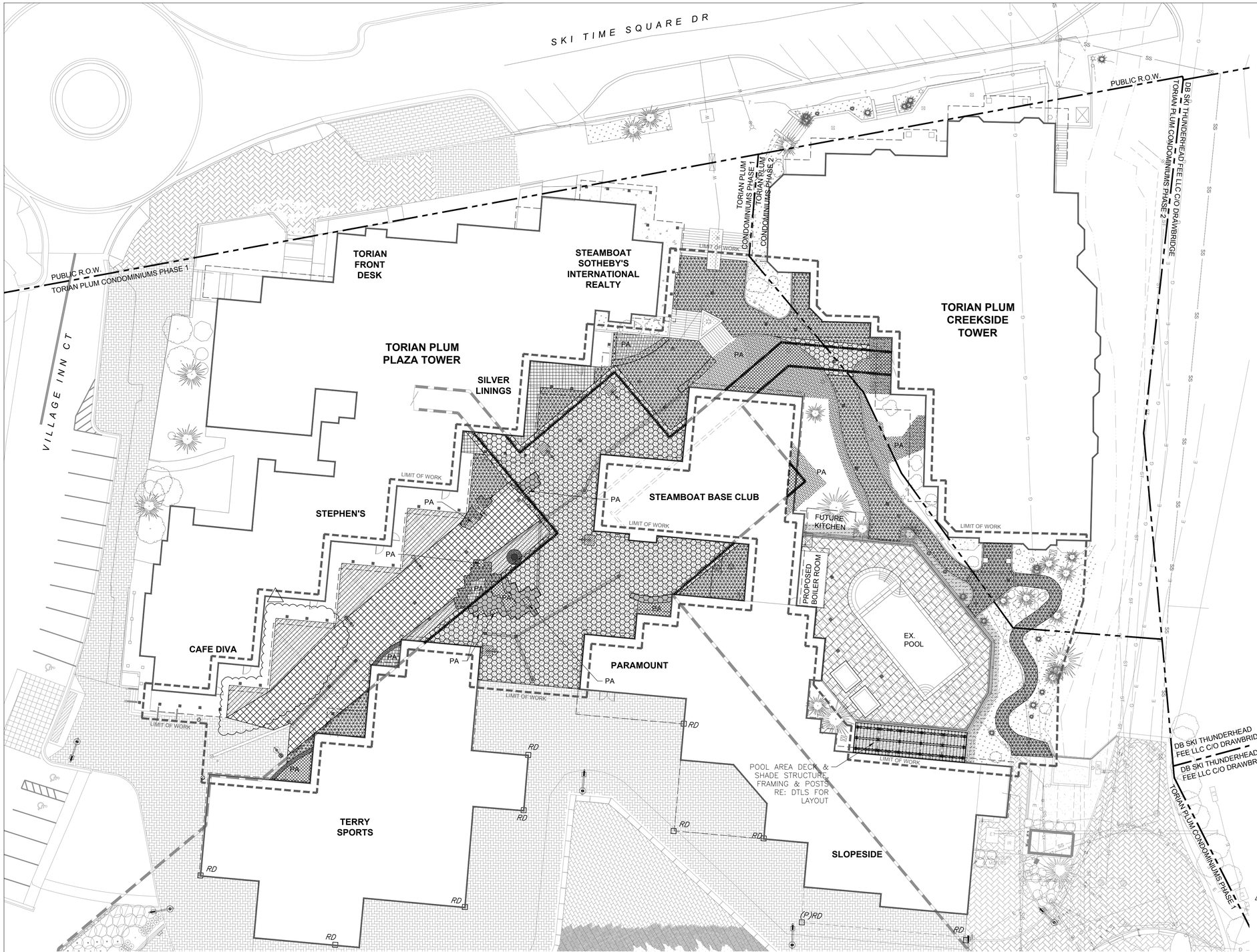

RCRBD

RECORD SET

SITE DETAIL KEYNOTES

PAVING	DTL/SHT
CONCRETE PAVEMENT	01/L3.0
CONCRETE PAVEMENT - ON STRUCTURE	02/L3.0
CONCRETE UNIT PAVERS - OFF STRUCTURE	03/L3.0
CONCRETE UNIT PAVERS - ON STRUCTURE	04/L3.0
CONCRETE UNIT PAVERS - TRANSITION OFF STRCT	02/L3.7
CONCRETE PAVERS @ POOL	05/L3.0
CONCRETE PAVERS - VEHICULAR	06/L3.0
COLORED CONCRETE BAND - OFF STRUCTURE	09/L3.0
COLORED CONCRETE BAND - ON STRUCTURE	10/L3.0
PAVING PATTERN - PRIMARY	11/L3.0
PAVING PATTERN - POOL AREA	12/L3.0
POOL COPING	03/L3.7

STAIRS, WALLS, FOOTINGS, CURBS, STEPS	
STACKED STONE SLAB WALL - OFF STRUCTURE	02/L3.1
STACKED STONE SLAB WALL - ON STRUCTURE	04/L3.1
STONE VENEER PLANTER WALL - OFF STRUCTURE	01/L3.2
STONE VENEER PLANTER WALL - ON STRUCTURE	02/L3.2
STONE VENEER WALL - OFF STRUCTURE	03/L3.2
CONCRETE BASE FOR ENTRY GATEWAY	01/L3.4
STONE VENEER LIGHT POLE BASE - OFF STRUCTURE	02/L3.4
STONE VENEER LIGHT POLE BASE - ON STRUCTURE	03/L3.4
COLORED CONCRETE STEP	N/A

SITE AMENITIES	
FIRE PIT	04/L3.7
POOL AREA DECK AND SHADE STRUCTURE	01/L3.5
POOL FENCE - EXISTING	01/L3.6
POOL SIDE PLANTER	01/L3.7
SCREEN FENCING	01/L3.3

SITE LIGHTING	
PEDESTRIAN LIGHT	04/L3.4
PEDESTRIAN LIGHT - STRUCTURE	05/L3.4
STONE VENEER WALL LIGHT	05/L3.2
EVENT RECEPTACLE	04/L3.2
POOL FENCE LIGHT	N/A

DRAINAGE	
AREA DRAIN	06/L3.1
COLORED CONC. VALLEY PAN - OFF STRUCTURE	07/L3.0
COLORED CONC. VALLEY PAN - ON STRUCTURE	08/L3.0
TRENCH GRATE	01/L3.1

PLANTING	
TREE PLANTING	01/L3.8
ORNAMENTAL GRASS / PERENNIAL PLANTING	02/L3.8
INTENSIVE GARDEN ROOF ASSEMBLY	03/L3.8
LANDSCAPE PLANTER - ON STRUCTURE	04/L3.8
SHRUB PLANTING	05/L3.8

BENCHMARK
TOP OF AN ALUMINUM CAP FOR THE NORTHWEST CORNER OF SECTION 27, T6N, R84W, SIXTH P.M. ELEVATION = 6913.45 (NGVD 29)

DESIGN TEAM ASSUMES NO RESPONSIBILITY FOR UTILITY LOCATIONS. THE UTILITIES SHOWN ON THIS DRAWING HAVE BEEN PLOTTED FROM THE BEST AVAILABLE INFORMATION. IT IS, HOWEVER, THE CONTRACTORS RESPONSIBILITY TO FIELD VERIFY THE SIZE, MATERIAL, HORIZONTAL AND VERTICAL LOCATION OF ALL UTILITIES PRIOR TO THE COMMENCEMENT OF ANY CONSTRUCTION.

NORTH

SCALE: 1"=20'-0" (0 10 20 40)

SUBGRADE MATERIALS LEGEND

- CONC. (6" THK) SUBGRADE SLAB
- CONC. (4" THK) SUBGRADE SLAB
- WASHED NO. 57 STONE
- 12" TOPSOIL ON GRADE
- 24" TOPSOIL ON GRADE
- GARDENDRAIN GR50 W/ LIGHTWEIGHT SOIL
- CLASS 6 A.B.C.-12" DEPTH
- CLASS 6 A.B.C.-6" DEPTH
- CLASS 6 A.B.C.-2" DEPTH
- CONCRETE FOOTER-OFF STRUCTURE
- CONCRETE FOOTER-ON STRUCTURE
- CONCRETE PIER
- BUILDING EDGE
- BUILDING OVERHANG
- WATERPROOFING-EDGE OF STRUCTURE
- PA PLANTING AREA
- LIMIT OF WORK
- PARKING GARAGE

wenk ASSOCIATES
PLANNERS & LANDSCAPE ARCHITECTS
303.628.0003

JOSHUA J. CULWELL 985
10/25/2012
Original Date of Licensure
09.06.18
STATE OF COLORADO
LICENSED LANDSCAPE ARCHITECT

WATERPROOFING / RENOVATION - PHASE 2
TORIAN PLUM PARKING STRUCTURE
STEAMBOAT SPRINGS, CO

Date 10.22.18
Drawn By BP
Reviewed by JC
Job No. 16021.01

Revisions

Name	Date
ADDENDUM A	01/05/18
BLDG DEPT #1	03/06/18

Issue:
100% Construction Documents

Sheet Title:
Subgrade Materials Plan

Sheet Number
L1.1

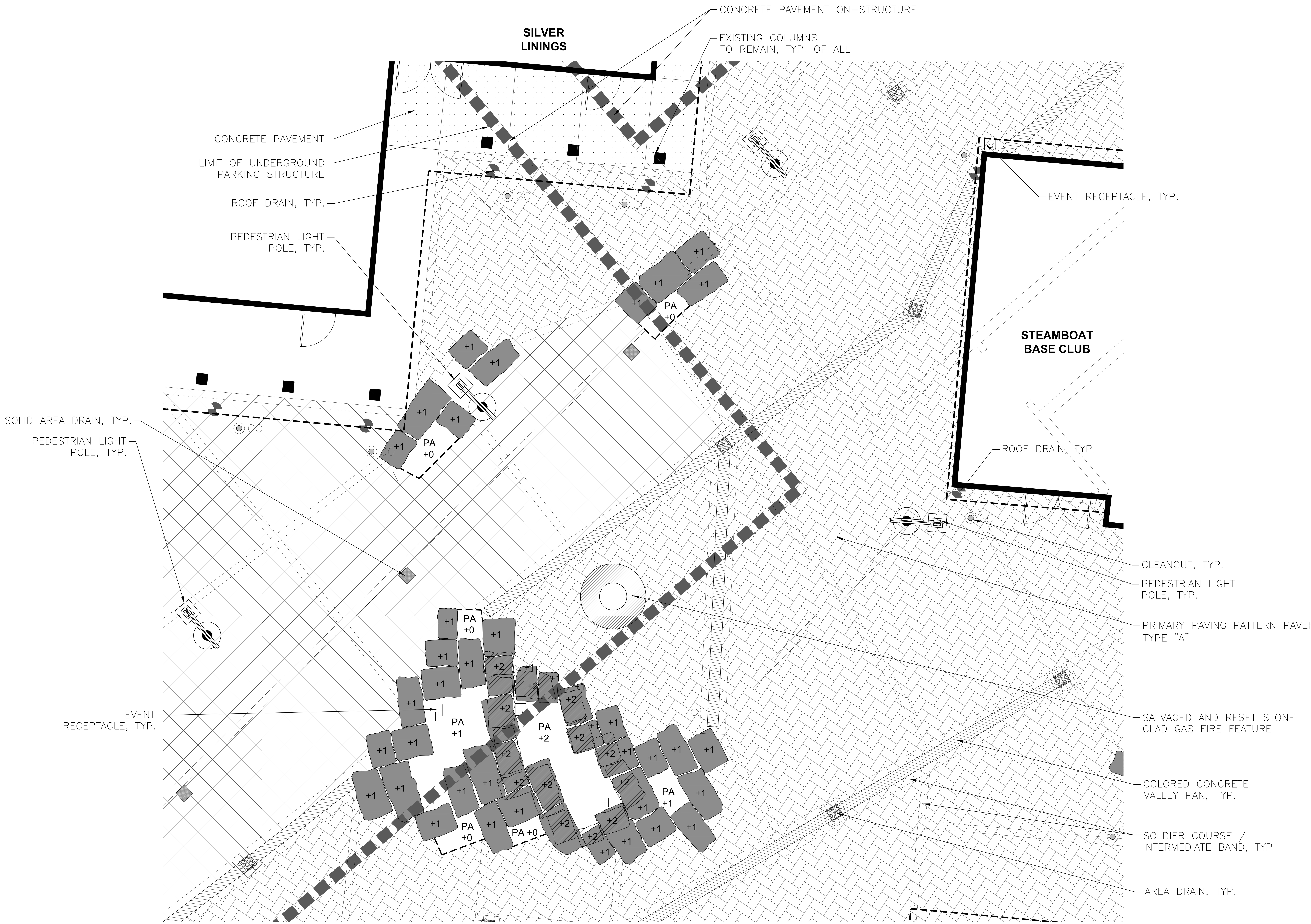

RCRBD

RECORD SET

SITE DETAIL KEYNOTES

PAVING	DTL/SHT
CONCRETE PAVEMENT	01/L3.0
CONCRETE PAVEMENT - ON STRUCTURE	02/L3.0
CONCRETE UNIT PAVERS - OFF STRUCTURE	03/L3.0
CONCRETE UNIT PAVERS - ON STRUCTURE	04/L3.0
CONCRETE UNIT PAVERS - TRANSITION OFF STRCT	02/L3.7
CONCRETE PAVERS @ POOL	05/L3.0
CONCRETE PAVERS - VEHICULAR	06/L3.0
COLORED CONCRETE BAND - OFF STRUCTURE	09/L3.0
COLORED CONCRETE BAND - ON STRUCTURE	10/L3.0
PAVING PATTERN - PRIMARY	11/L3.0
PAVING PATTERN - POOL AREA	12/L3.0
POOL COPING	03/L3.7
STAIRS, WALLS, FOOTINGS, CURBS, STEPS	
STACKED STONE SLAB WALL - OFF STRUCTURE	02/L3.1
STACKED STONE SLAB WALL - ON STRUCTURE	04/L3.1
STONE VENEER PLANTER WALL - OFF STRUCTURE	01/L3.2
STONE VENEER PLANTER WALL - ON STRUCTURE	02/L3.2
STONE VENEER WALL - OFF STRUCTURE	03/L3.2
CONCRETE BASE FOR ENTRY GATEWAY	01/L3.4
STONE VENEER LIGHT POLE BASE - OFF STRUCTURE	02/L3.4
STONE VENEER LIGHT POLE BASE - ON STRUCTURE	03/L3.4
COLORED CONCRETE STEP	N/A
SITE AMENITIES	
FIRE PIT	04/L3.7
POOL AREA DECK AND SHADE STRUCTURE	01/L3.5
POOL FENCE - EXISTING	01/L3.6
POOL SIDE PLANTER	01/L3.7
SCREEN FENCING	01/L3.3
SITE LIGHTING	
PEDESTRIAN LIGHT	04/L3.4
PEDESTRIAN LIGHT - STRUCTURE	05/L3.4
STONE VENEER WALL LIGHT	05/L3.2
EVENT RECEPTACLE	04/L3.2
POOL FENCE LIGHT	N/A
DRAINAGE	
AREA DRAIN	06/L3.1
COLORED CONC. VALLEY PAN - OFF STRUCTURE	07/L3.0
COLORED CONC. VALLEY PAN - ON STRUCTURE	08/L3.0
TRENCH GRATE	01/L3.1
PLANTING	
TREE PLANTING	01/L3.8
ORNAMENTAL GRASS / PERENNIAL PLANTING	02/L3.8
INTENSIVE GARDEN ROOF ASSEMBLY	03/L3.8
LANDSCAPE PLANTER - ON STRUCTURE	04/L3.8
SHRUB PLANTING	05/L3.8

BENCHMARK
TOP OF AN ALUMINUM CAP FOR THE NORTHWEST CORNER OF SECTION 27, T6N, R84W, SIXTH P.M. ELEVATION = 6913.45 (NGVD 29)

DESIGN TEAM ASSUMES NO RESPONSIBILITY FOR UTILITY LOCATIONS. THE UTILITIES SHOWN ON THIS DRAWING HAVE BEEN PLOTTED FROM THE BEST AVAILABLE INFORMATION. IT IS, HOWEVER, THE CONTRACTORS RESPONSIBILITY TO FIELD VERIFY THE SIZE, MATERIAL, HORIZONTAL AND VERTICAL LOCATION OF ALL UTILITIES PRIOR TO THE COMMENCEMENT OF ANY CONSTRUCTION.

LAYOUT LEGEND

- CONCRETE UNIT PAVERS- PEDESTRIAN TYPE "A"
- CONCRETE UNIT PAVERS- SECONDARY
- CONCRETE UNIT PAVERS- POOL TYPE "B"
- CONCRETE UNIT PAVERS- VEHICULAR TYPE "A"
- SALVAGE & RESET PAVERS
- CONCRETE PAVEMENT
- POOL AREA DECK & SHADE STRUCTURE
- POOL COPING
- SOLDIER COURSE/ INTERMEDIATE BAND
- STONE VENEER WALL
- STONE SLABS- 1ST LAYER
- STONE SLABS- 2ND LAYER
- COLORED CONCRETE BAND
- COLORED CONCRETE VALLEY PAN
- POOL FENCE
- SOLID AREA DRAIN
- AREA DRAIN
- SCREEN FENCE
- EXISTING ROOF DRAIN
- TRENCH DRAIN PREFABRICATED
- STORM CLEAN OUT
- PAVER RESTRAINT
- BUILDING EDGE
- BUILDING OVERHANG
- PEDESTRIAN LIGHT POLE
- WALL LIGHT / POOL FENCE LIGHT
- EVENT RECEPTACLE
- EXISTING BOLLARD LIGHT- RELOCATE
- ELECTRIC CONDUIT & LINE HEAT TRACE AT ROOF DRAINS
- PA PLANTING AREA

NORTH

0 2.5 5 10

SCALE: 1"=5'-0"

wenk ASSOCIATES
PLANNERS & LANDSCAPE ARCHITECTS
303.628.0003

JOSHUA J. CULWELL 985 10/25/2012 Original Date of Licensure 03.06.18 STATE OF COLORADO LICENSED LANDSCAPE ARCHITECT

WATERPROOFING / RENOVATION - PHASE 2
TORIAN PLUM PARKING STRUCTURE
STEAMBOAT SPRINGS, CO

Date 10.22.18
Drawn By BP
Reviewed by JC
Job No. 16021.01

Revisions

Name	Date
BLDG DEPT #1	03/06/18

Issue: 100% Construction Documents

Sheet Title: Landscape Plan

Sheet Number L2.0

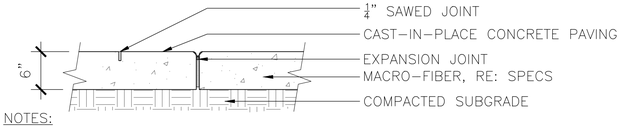

NOTES:
1. REFER TO PLANS & SPECIFICATIONS FOR FINISHES.
2. PROVIDE 1/2" TOOLED EDGES AT ALL TOOLED AND EXPANSION JOINTS.
3. PROVIDE CONTROL & EXPANSION JOINTS WHERE INDICATED ON PLANS.
4. PROVIDE TOOLED JOINTS NOT MORE THAN 10'-0" ON CENTER, OR AS INDICATED ON THE PLANS.
5. ALL CONCRETE PAVING SHALL BE 6" DEPTH.
6. ALL WALKS TO HAVE 2% CROSS SLOPE.
7. REFERENCE SPECIFICATIONS FOR CONCRETE STRENGTH AND REINFORCEMENT REQUIREMENTS.

01 CONCRETE PAVEMENT
1"=1'-0"

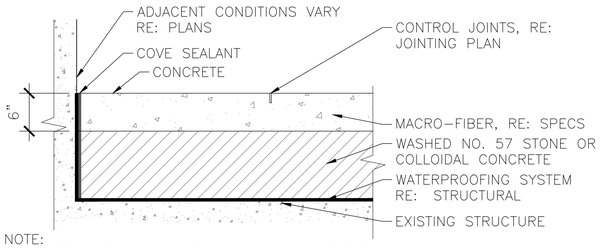

NOTE:
1. REFERENCE SPECIFICATIONS FOR CONCRETE FINISH AND COLOR.
2. CONTRACTOR SHALL PROVIDE ISOLATION JOINTS AT ALL WALLS, BUILDINGS, STEPS AND AS DIRECTED BY OWNER'S REPRESENTATIVE UNLESS OTHERWISE INDICATED.

02 CONCRETE UNIT PAVERS - ON STRUCTURE
1"=1'-0"

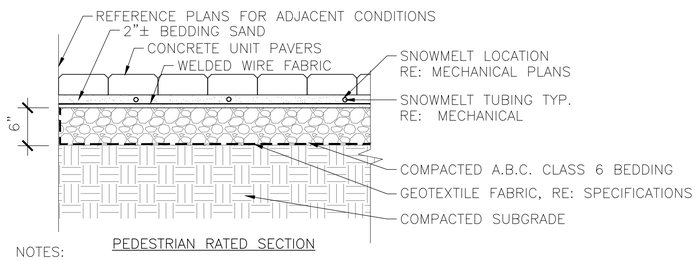

PEDESTRIAN RATED SECTION

NOTES:
1. REFERENCE PAVEMENT LEGEND ON LAYOUT PLANS FOR LOCATIONS OF CONCRETE UNIT PAVERS.
2. REFERENCE SPECIFICATIONS FOR MANUFACTURER, STYLE, AND COLOR OF PAVERS.
3. CONTRACTOR SHALL FIELD VERIFY PAVEMENT CONDITIONS AND PATTERN LAYOUT WITH OWNER'S REPRESENTATIVE PRIOR TO CONSTRUCTION.
4. REFERENCE LAYOUT PLANS FOR PAVING PATTERNS
5. CONCRETE UNIT PAVERS SHALL BE FLUSH WITH SURROUNDING GRADE UNLESS OTHERWISE NOTED.
6. CONCRETE UNIT PAVERS SHALL BE LAID FROM BANDS IN HALVES OR WHOLES WHENEVER POSSIBLE AND CUT TO FIT AT EXISTING BUILDINGS.
7. FINISH GRADE OF CONCRETE UNIT PAVERS SHALL MATCH EXISTING GRADE AT BUILDINGS UNLESS OTHERWISE NOTED.
8. FINISH ELEVATIONS OF PAVERS SHALL NOT DEVIATE MORE THAN 1/8"
9. CONTRACTOR SHALL USE A MIN. SIZE OF 1/2 A UNIT PAVER WHEN TRANSITIONING OR TERMINATING PAVEMENT. CONTRACTOR SHALL CUT AND SET PAVERS ACCORDINGLY OR AS DIRECTED BY OWNER'S REPRESENTATIVE.

03 CONCRETE UNIT PAVERS - OFF STRUCTURE
1"=1'-0"

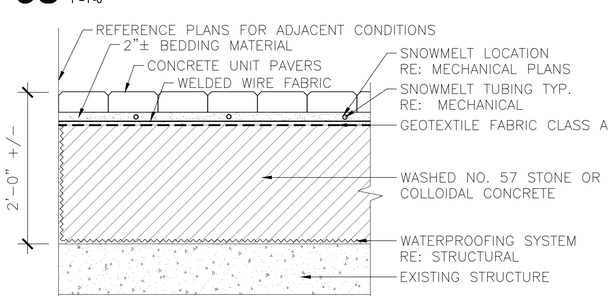

ON STRUCTURE SECTION

NOTES:
1. REFERENCE DETAIL 01/L3.0 CONCRETE UNIT PAVERS – OFF STRUCTURE FOR NOTES.

04 CONCRETE UNIT PAVERS - ON STRUCTURE
1"=1'-0"

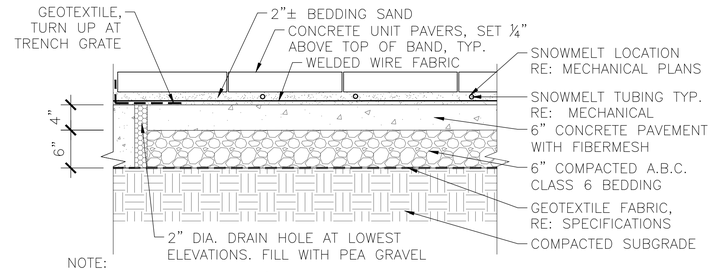

NOTE:
1. REFERENCE DETAIL 01/D3.0 CONCRETE UNIT PAVERS – OFF STRUCTURE FOR NOTES.

05 CONCRETE PAVERS @ POOL AREA
1"=1'-0"

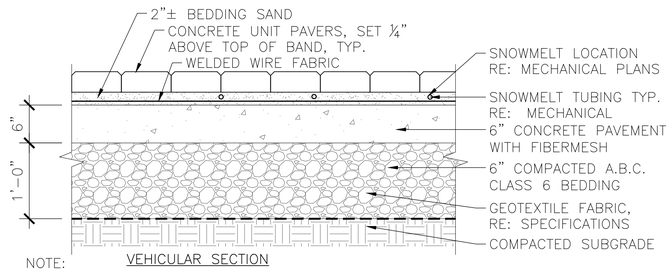

VEHICULAR SECTION

NOTE:
1. REFERENCE DETAIL 01/D3.0 CONCRETE UNIT PAVERS – OFF STRUCTURE FOR NOTES.

06 CONCRETE PAVERS - VEHICULAR
1"=1'-0"

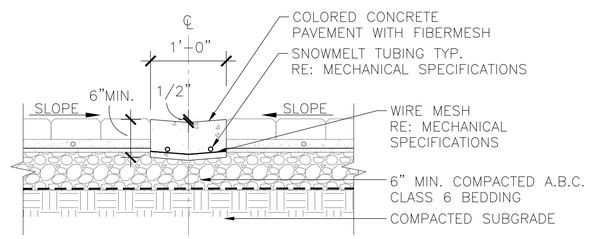

NOTE:
1. REFERENCE SPECIFICATIONS FOR CONCRETE FINISH AND COLOR.
2. CONTRACTOR SHALL PROVIDE ISOLATION JOINTS AT ALL WALLS, BUILDINGS, AND AS DIRECTED BY OWNER'S REPRESENTATIVE UNLESS OTHERWISE INDICATED.

07 COLORED CONCRETE VALLEY PAN - OFF STRUCTURE
1"=1'-0"

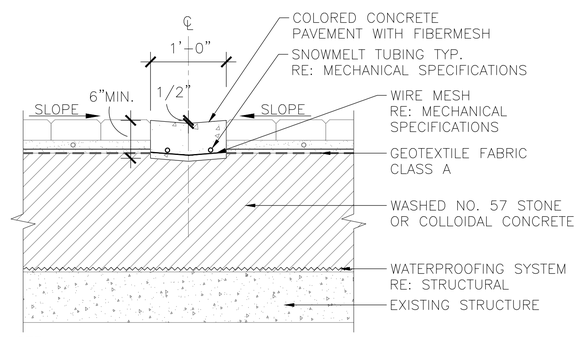

NOTE:
1. REFERENCE SPECIFICATIONS FOR CONCRETE FINISH AND COLOR.
2. CONTRACTOR SHALL PROVIDE ISOLATION JOINTS AT ALL WALLS, BUILDINGS, AND AS DIRECTED BY OWNER'S REPRESENTATIVE UNLESS OTHERWISE INDICATED.

08 COLORED CONCRETE VALLEY PAN - ON STRUCTURE
1"=1'-0"

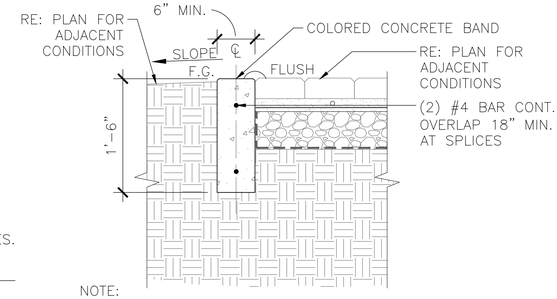

NOTE:
1. REFERENCE SPECIFICATIONS FOR CONCRETE FINISH AND COLOR.

09 COLORED CONCRETE BAND - OFF STRUCTURE
1"=1'-0"

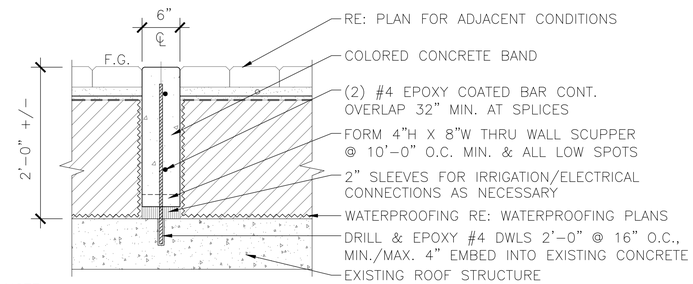

NOTE:
1. REFERENCE SPECIFICATIONS FOR CONCRETE FINISH AND COLOR.
2. CONTRACTOR TO COORDINATE WITH WATERPROOFING CONTRACTOR FOR PROPER INSTALLATION OF MATERIALS ON WATERPROOFING.

10 COLORED CONCRETE BAND - ON STRUCTURE
1"=1'-0"

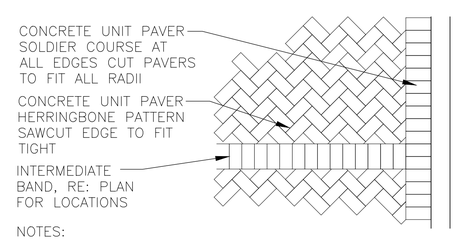

NOTES:
1. CONTRACTOR TO FIELD VERIFY LAYOUT WITH OWNER'S REP. PRIOR TO CONSTRUCTION. REFERENCE PLAN FOR PAVER BAND LOCATIONS
2. REFERENCE CONCRETE UNIT PAVERS–ON STRUCTURE, 1/L4.1 NOTES.
3. CONTRACTOR SHALL PLACE SOLDIER COURSE AS DIRECTED BY OWNER'S REPRESENTATIVE AND AS INDICATED IN PLANS.

11 PAVING PATTERN - PRIMARY
1"=1'-0"

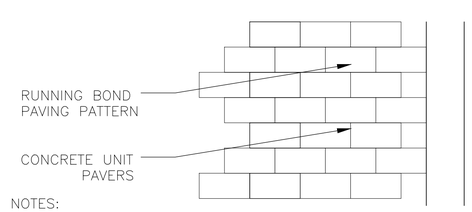

NOTES:
1. CONTRACTOR TO FIELD VERIFY LAYOUT WITH OWNER'S REP. PRIOR TO CONSTRUCTION. REFERENCE PLAN FOR PAVER BAND LOCATIONS & WIDTHS.
2. REFERENCE CONCRETE UNIT PAVERS NOTES.

12 PAVING PATTERN - POOL AREA
1"=1'-0"

RCRBD
RECORD SET

w e n k
ASSOCIATES
PLANNERS & LANDSCAPE ARCHITECTS
303.628.0003

JOSHUA J. CULWELL 985 10/25/2018 Original Date of Licensure 09.04.18 STATE OF COLORADO LICENSED LANDSCAPE ARCHITECT

WATERPROOFING / RENOVATION - PHASE 2
TORIAN PLUM PARKING STRUCTURE
STEAMBOAT SPRINGS, CO

Date	10.22.18
Drawn By	BP
Reviewed by	JC
Job No.	16021.01

Revisions

Name	Date
ADDENDUM A	01/05/18
ADDENDUM 4	01/19/18
△ BLDG DEPT #1	03/06/18

Issue:
100% Construction Documents

Sheet Title:
Site Details

Sheet Number
L3.0

RCRBD

RECORD SET

01 NOT USED
1"=1'-0"

05 NOT USED
N.T.S.

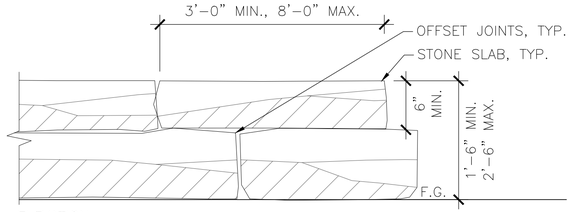

ELEVATION
1"=1'-0"

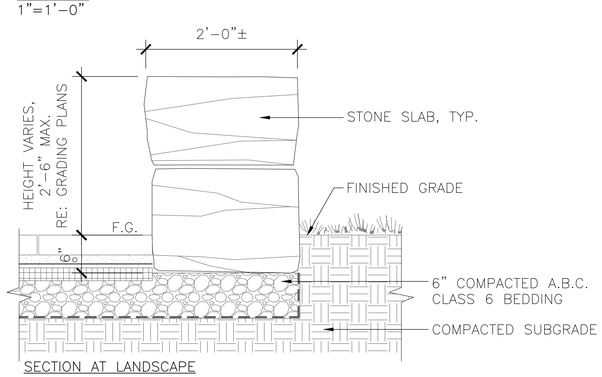

SECTION AT LANDSCAPE
1"=1'-0"

NOTES:
1. REFERENCE SPECIFICATIONS FOR STONE TYPE, COLOR, AND STYLE.
2. REFERENCE GRADING PLAN FOR TOP OF WALL ELEVATIONS
3. STONE WALL SHALL AVERAGE 2'-0" IN WIDTH. CONTRACTOR SHALL FIELD VERIFY WALL WIDTHS AND HEIGHTS WITH OWNER'S REPRESENTATIVE PRIOR TO CONSTRUCTION.
4. CONTRACTOR SHOULD ANTICIPATE SAW CUTTING OF UP TO (3) SIDES OF STONE.

02 STACKED STONE SLAB WALL - OFF STRUCTURE
1"=1'-0"

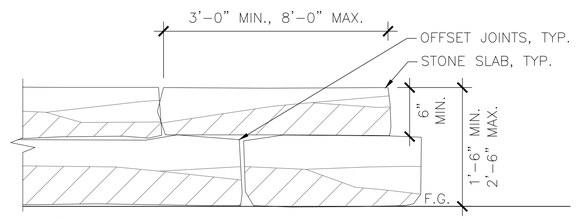

ELEVATION
1"=1'-0"

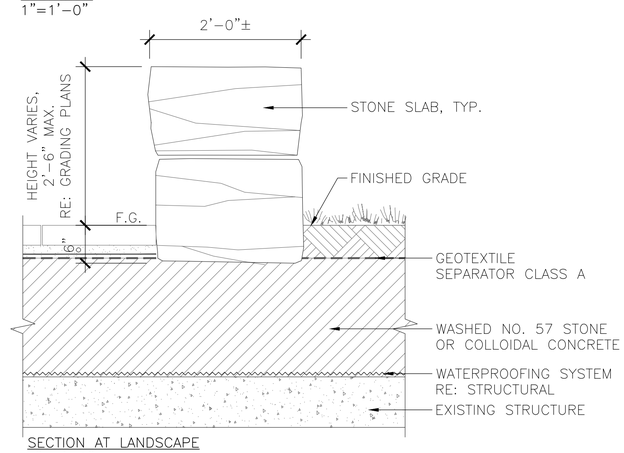

SECTION AT LANDSCAPE
1"=1'-0"

NOTES:
1. REFERENCE SPECIFICATIONS FOR STONE TYPE, COLOR, AND STYLE.
2. REFERENCE GRADING PLAN FOR TOP OF WALL ELEVATIONS
3. STONE WALL SHALL AVERAGE 2'-0" IN WIDTH. CONTRACTOR SHALL FIELD VERIFY WALL WIDTHS AND HEIGHTS WITH OWNER'S REPRESENTATIVE PRIOR TO CONSTRUCTION.
4. CONTRACTOR SHOULD ANTICIPATE SAW CUTTING OF UP TO (3) SIDES OF STONE.

04 STACKED STONE SLAB WALL - ON STRUCTURE
1"=1'-0"

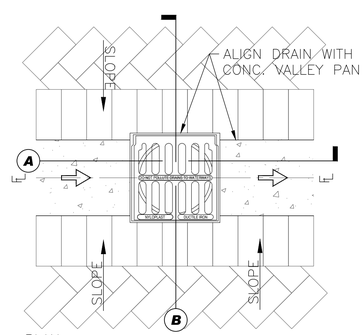

PLAN

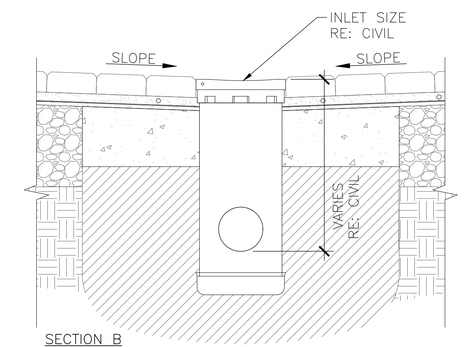

SECTION B

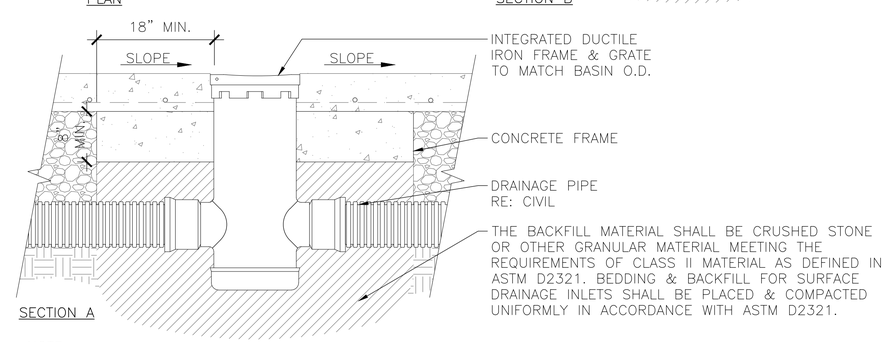

SECTION A

NOTE:
1. CONTRACTOR SHALL INSTALL IN ACCORDANCE WITH MANUFACTURER'S INSTRUCTIONS AND RECOMMENDATIONS.
2. CONTRACTOR SHALL FIELD VERIFY ALL LOCATIONS OF AREA DRAINS WITH OWNER'S REPRESENTATIVE PRIOR TO INSTALLATION.

06 AREA DRAIN
1"=1'-0"

weink
ASSOCIATES
PLANNERS & LANDSCAPE ARCHITECTS
303.628.0003

JOSHUA J. CULWELL
985
10/25/2012
Original Date of Licensure
STATE OF COLORADO
LICENSED LANDSCAPE ARCHITECT

WATERPROOFING / RENOVATION - PHASE 2
TORIAN PLUM PARKING STRUCTURE
STEAMBOAT SPRINGS, CO

Date	10.22.18
Drawn By	BP
Reviewed by	JC
Job No.	16021.01

Revisions

Name	Date
ADDENDUM 4	01/19/18
△ BLDG DEPT #1	03/06/18
△ BLDG DEPT #2	04/18/18

Issue:
100% Construction Documents

Sheet Title:
Site Details

Sheet Number
L3.1

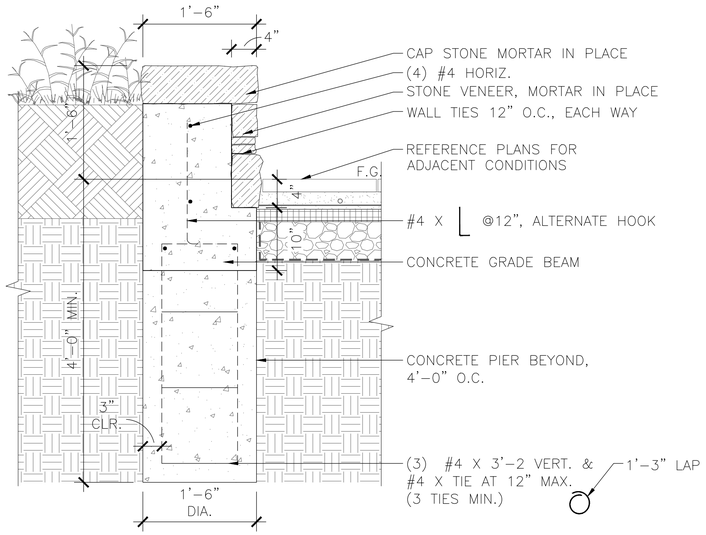

STONE VENEER PLANTER WALL – OFF STRUCTURE
1"=1'-0"

NOTES:
1. REFERENCE SPECIFICATIONS FOR STONE TYPE, COLOR, AND STYLE.
2. STONE SHALL BE SET IN MORTAR, NO MORTAR SHALL BE VISIBLE, JOINTS SHALL BE 1/2" MAX., DEEP RAKE MORTAR ALL JOINTS
3. REFERENCE GRADING PLAN FOR TOP OF WALL ELEVATIONS. CONTRACTOR SHALL VERIFY WALL HEIGHTS WITH OWNER'S REPRESENTATIVE PRIOR TO CONSTRUCTION.

01 STONE VENEER PLANTER WALL - OFF STRUCTURE
1"=1'-0"

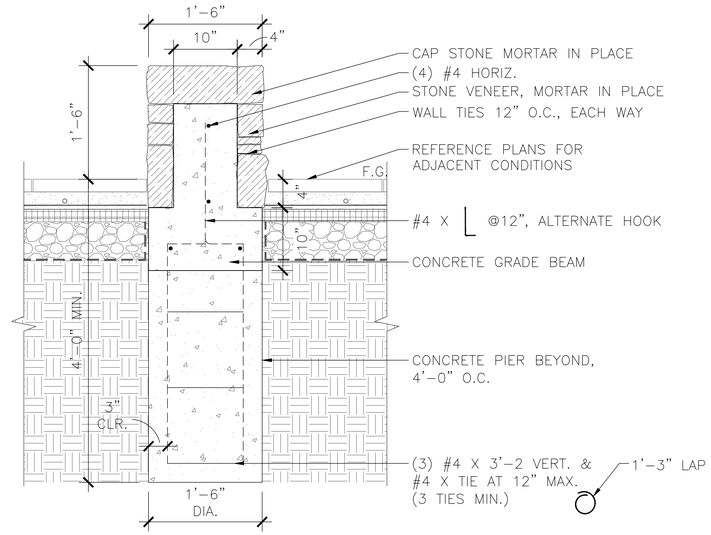

STONE VENEER WALL – OFF STRUCTURE @ PAVERS
1"=1'-0"

NOTES:
1. REFERENCE SPECIFICATIONS FOR STONE TYPE, COLOR, AND STYLE.
2. STONE SHALL BE SET IN MORTAR, NO MORTAR SHALL BE VISIBLE, JOINTS SHALL BE 1/2" MAX., DEEP RAKE MORTAR ALL JOINTS
3. REFERENCE GRADING PLAN FOR TOP OF WALL ELEVATIONS. CONTRACTOR SHALL VERIFY WALL HEIGHTS WITH OWNER'S REPRESENTATIVE PRIOR TO CONSTRUCTION.

03 STONE VENEER WALL - OFF STRUCTURE
1"=1'-0"

RCRBD

RECORD SET

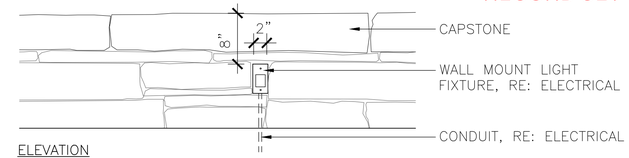

ELEVATION

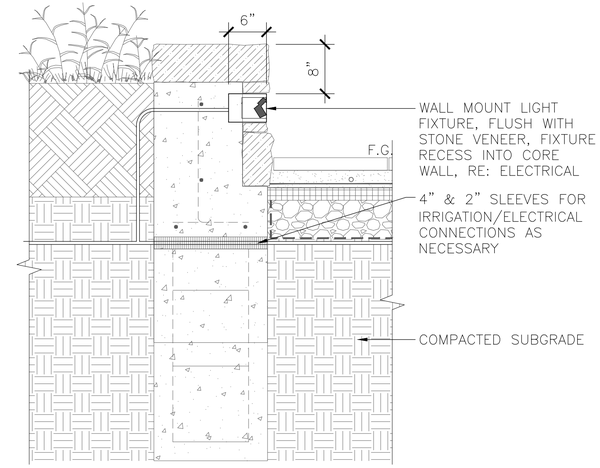

STONE VENEER WALL LIGHT – OFF STRUCTURE
1"=1'-0"

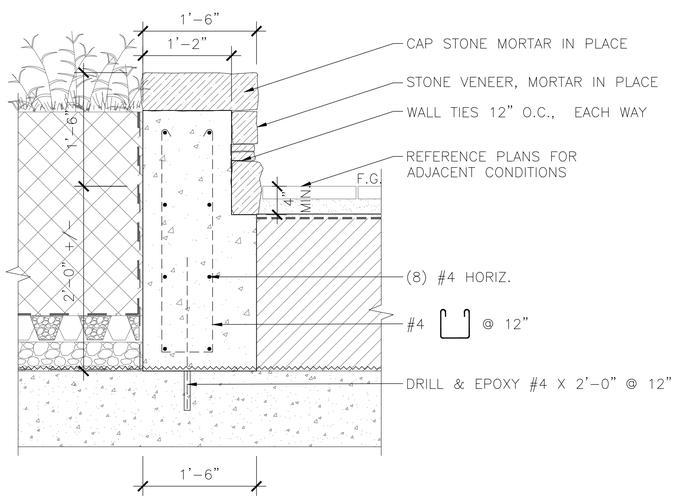

STONE VENEER PLANTER WALL – ON STRUCTURE
1"=1'-0"

NOTES:
1. REFERENCE SPECIFICATIONS FOR STONE TYPE, COLOR, AND STYLE.
2. STONE SHALL BE SET IN MORTAR, NO MORTAR SHALL BE VISIBLE, JOINTS SHALL BE 1/2" MAX., DEEP RAKE MORTAR ALL JOINTS
3. REFERENCE GRADING PLAN FOR TOP OF WALL ELEVATIONS. CONTRACTOR SHALL VERIFY WALL HEIGHTS WITH OWNER'S REPRESENTATIVE PRIOR TO CONSTRUCTION.

02 STONE VENEER PLANTER WALL - ON STRUCTURE
1"=1'-0"

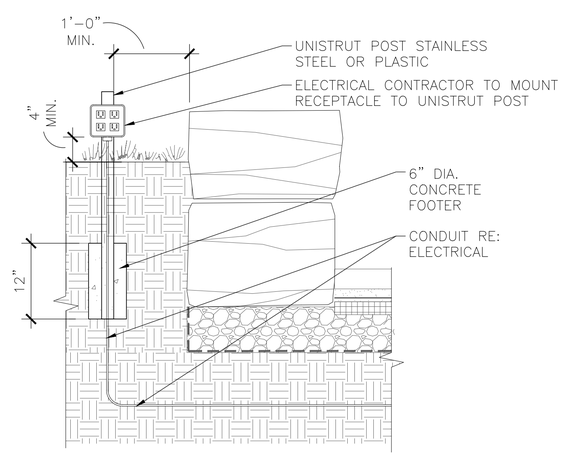

NOTE:
1. REFERENCE ELECTRICAL DRAWINGS AND SPECIFICATIONS FOR ADDITIONAL INFORMATION.

04 EVENT RECEPTACLE
1"=1'-0"

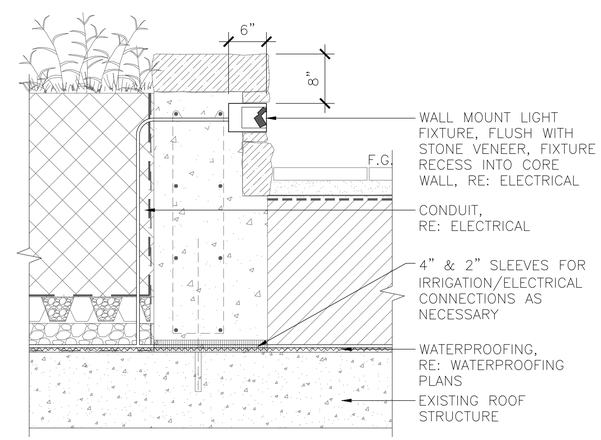

STONE VENEER WALL LIGHT – ON STRUCTURE
1"=1'-0"

NOTES:
1. CONTRACTOR SHALL INSTALL LIGHT IN ACCORDANCE WITH MANUFACTURER'S INSTRUCTIONS AND RECOMMENDATIONS.
2. CONTRACTOR SHALL FIELD VERIFY LOCATIONS OF LIGHT FIXTURES WITH DESIGNER/ENGINEER PRIOR TO CONSTRUCTION.

05 STONE VENEER WALL LIGHT
1"=1'-0"

w e n k
ASSOCIATES
PLANNERS & LANDSCAPE ARCHITECTS
303.628.0003

JOSHUA J. CULWELL 985
10/25/2012
Original Date of Licensure
STATE OF COLORADO
LICENSED LANDSCAPE ARCHITECT

WATERPROOFING / RENOVATION - PHASE 2
TORIAN PLUM PARKING STRUCTURE
STEAMBOAT SPRINGS, CO

Date 10.22.18
Drawn By BP
Reviewed by JC
Job No. 16021.01

Revisions

Name	Date
△ BLDG DEPT #1	03/06/18

Issue:
100% Construction Documents

Sheet Title:
Site Details

Sheet Number
L3.2

RCRBD

RECORD SET

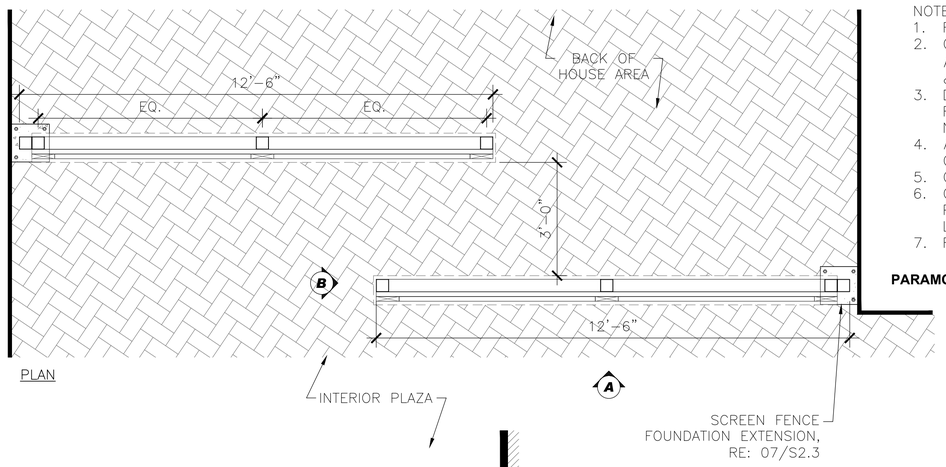

PLAN

NOTES:
1. REFERENCE SPECIFICATIONS FOR METAL TYPE & FINISH.
2. CONTRACTOR SHALL PROVIDE SHOP DRAWINGS OF RAILINGS & WELDS FOR APPROVAL BY OWNER'S REP. PRIOR TO CONSTRUCTION. DESIGN OF CONNECTIONS & WELDS BY FABRICATOR, UNLESS OTHERWISE NOTED.
3. DRAWINGS TO REFLECT DESIGN INTENT. CONTRACTOR SHALL DEVELOP PROPOSED FABRICATION UNIT SECTIONS AND INTERFACING CONNECTION, AND PROVIDE ALL NECESSARY ACCESSORIES, ATTACHMENTS, & WELDS.
4. ALL FENCING SHALL BE CONSTRUCTED IN ACCORDANCE WITH ALL APPLICABLE CODES AND STANDARDS.
5. CONTRACTOR SHALL GRIND AND SMOOTH EDGES TO MINIMIZE BURRS AND POINTS.
6. CONTRACTOR TO COORDINATE WITH OWNERS REPRESENTATIVE STEEL EMBEDMENT PLATE LOCATIONS PRIOR TO ANY CONCRETE POURING RELEVANT TO FENCING LOCATIONS.
7. FENCE SHALL BE LEVEL AND PLUMB.

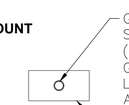

DROP ROD PLAN

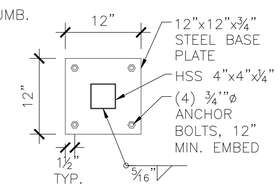

BASE PLATE PLAN
2"=1'-0"

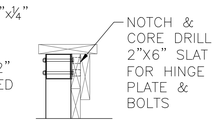

HINGE SECTION
2"=1'-0"

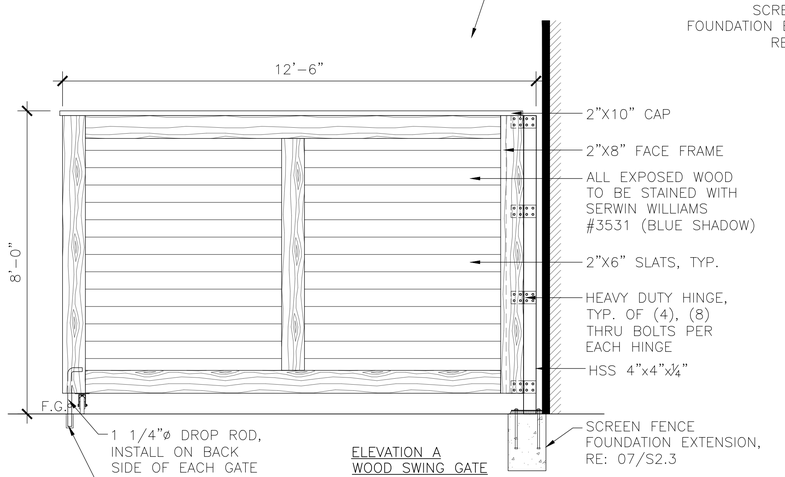

ELEVATION A
WOOD SWING GATE

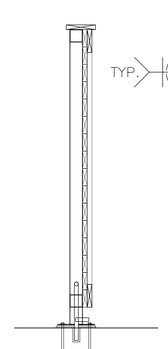

ELEVATION B
WOOD SWING GATE

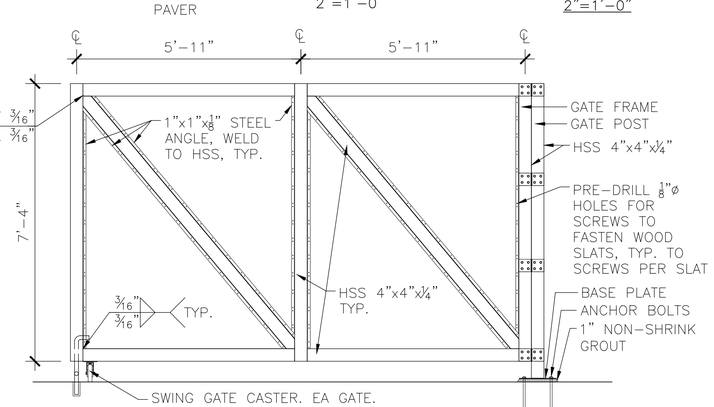

PRODUCT NOTES:
1. WOOD TO BE FASTENED TO STEEL WITH GALVANIZED SCREWS.
2. WOOD TO BE ALASKAN CEDAR PLANKS OR EQUIVALENT.
3. STEEL FRAME FINISH TO BE WEATHERED STEEL.
4. HINGES TO BE HEAVY DUTY MIN 250 LBS (ALLOWABLE) CAPACITY PER HINGE.

01 SCREEN FENCING
1/2"=1'-0"

w e n k
ASSOCIATES
PLANNERS & LANDSCAPE ARCHITECTS
303.628.0003

JOSHUA J. CULWELL 985
10/25/2012
Original Date of Licensure
STATE OF COLORADO
LICENSED LANDSCAPE ARCHITECT

WATERPROOFING / RENOVATION - PHASE 2
TORIAN PLUM PARKING STRUCTURE
STEAMBOAT SPRINGS, CO

Date	10.22.18
Drawn By	BP
Reviewed by	JC
Job No.	16021.01

Revisions

Name	Date
ADDENDUM 4	01/19/18
△ BLDG DEPT #1	03/06/18

Issue:
100% Construction Documents

Sheet Title:
Site Details

Sheet Number
L3.3

R C R B D

RECORD SET

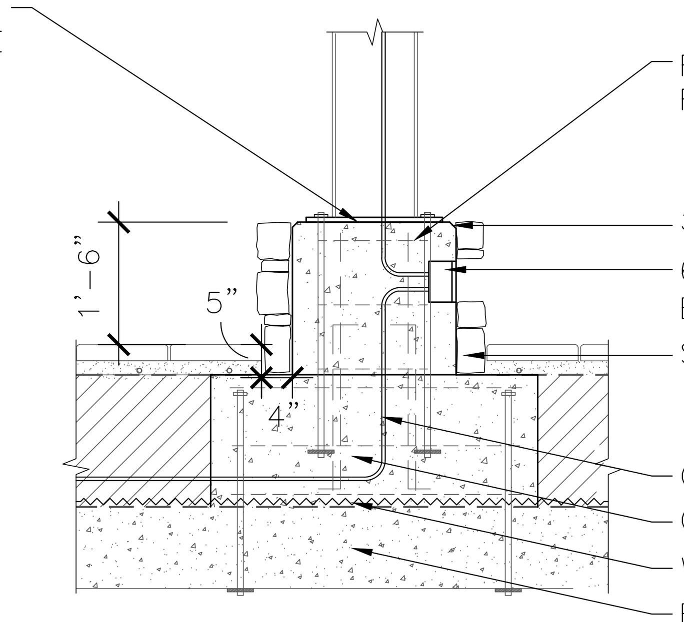

SECTION ON STRUCTURE

NOTES:
1. CONTRACTOR SHALL PROVIDE CONDUIT, JUNCTION BOX, AND ASSOCIATED ELECTRICAL FOR OVERHEAD LIGHT OPERATION.
2. FIELD VERIFY PLACEMENT OF JUNCTION BOX WITH OWNER'S REPRESENTATIVE PRIOR TO CONSTRUCTION.
3. REFERENCE SPECIFICATIONS FOR STONE TYPE, COLOR, AND STYLE.

03 STONE VENEER LIGHT POLE BASE - ON STRUCTURE

1/2"=1'-0"

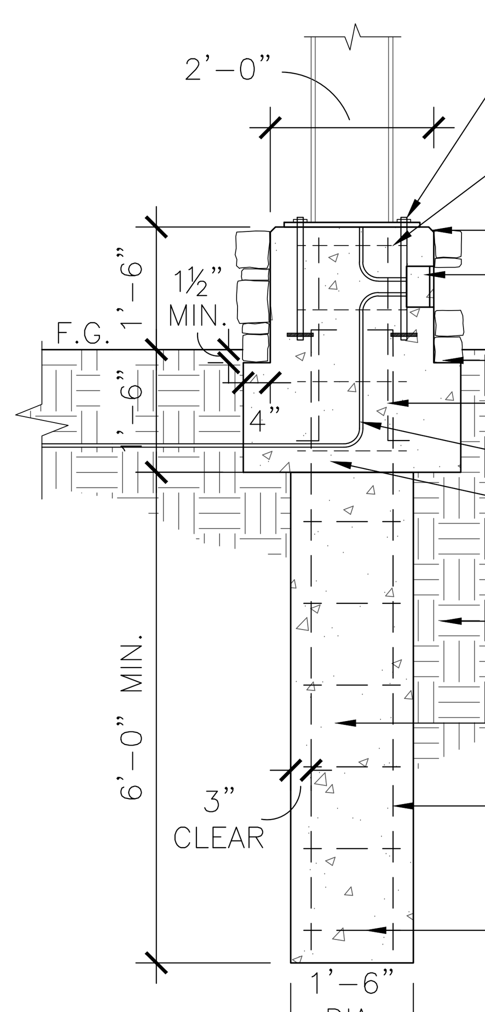

SECTION

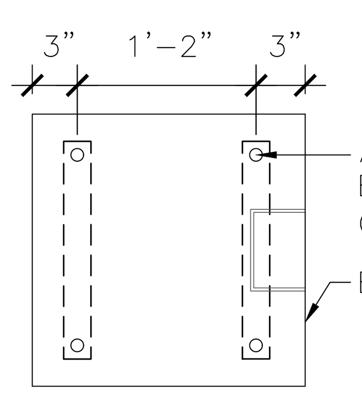

PLAN
NOT TO SCALE

NOTES:
1. CONTRACTOR SHALL PROVIDE CONDUIT, JUNCTION BOX, AND ASSOCIATED ELECTRICAL FOR LIGHT POLE OPERATION.
2. FIELD VERIFY PLACEMENT OF JUNCTION BOX WITH OWNER'S REPRESENTATIVE PRIOR TO CONSTRUCTION.
3. CAST CONCRETE BASE OVER DRILLED CAISSON FOUNDATION. CHAMFER ALL CORNERS 3/4" ALL REINFORCING STEEL IN CONCRETE BASE SHALL BE EPOXY COATED. CAISSON STEEL MAY BE PLAIN BLACK BAR.
4. REFERENCE SPECIFICATIONS FOR STONE TYPE, COLOR, STYLE.

02 STONE VENEER LIGHT POLE BASE - OFF STRUCTURE

1/2"=1'-0"

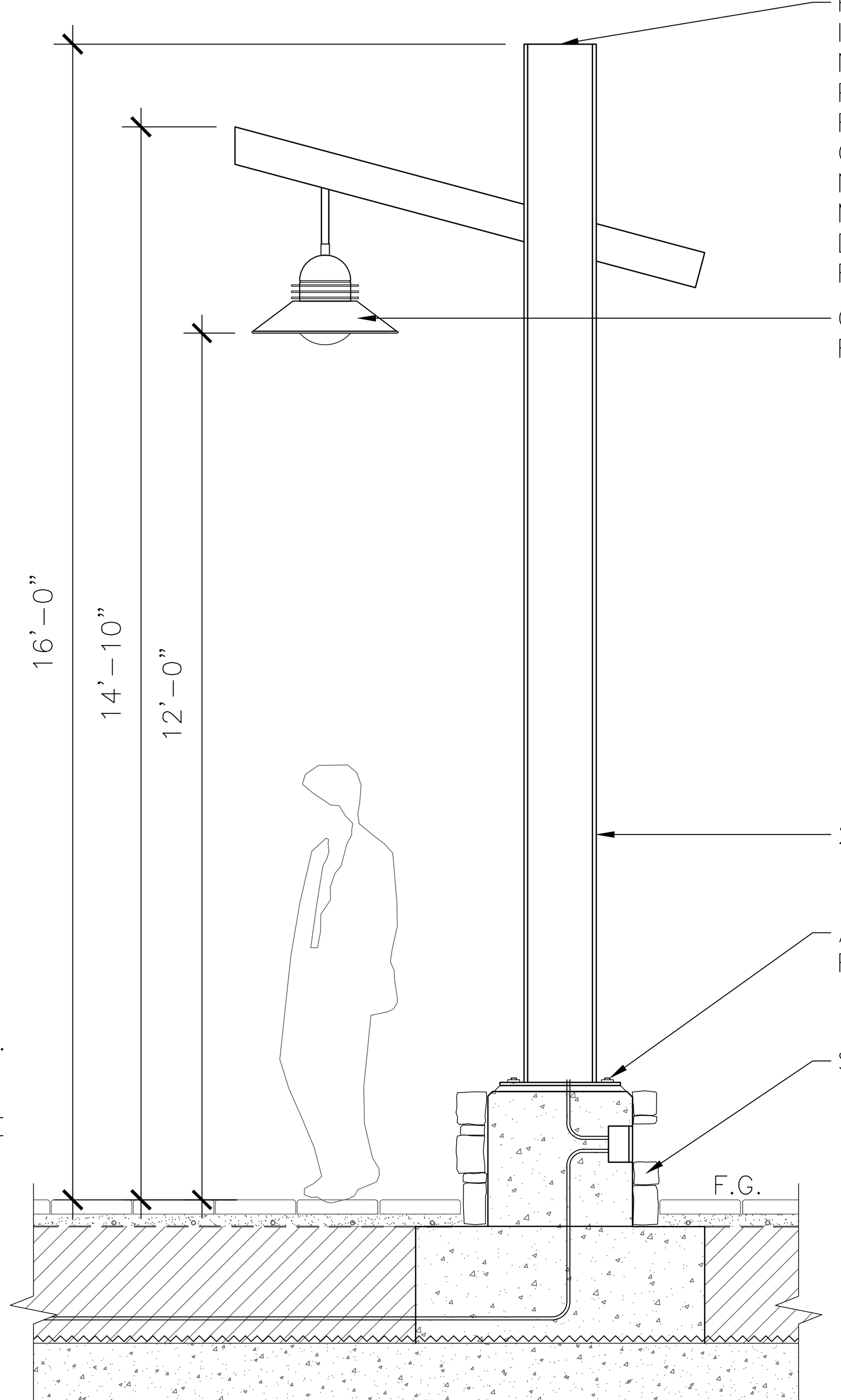

SECTION

NOTES:
1. CONTRACTOR SHALL PROVIDE CONDUIT, JUNCTION BOX, AND ASSOCIATED ELECTRICAL FOR OVERHEAD LIGHT OPERATION.
2. FIELD VERIFY PLACEMENT OF JUNCTION BOX WITH OWNER'S REPRESENTATIVE PRIOR TO CONSTRUCTION.
3. REFERENCE SPECIFICATIONS FOR STONE TYPE, COLOR, AND STYLE.

04 PEDESTRIAN LIGHT

1/2"=1'-0"

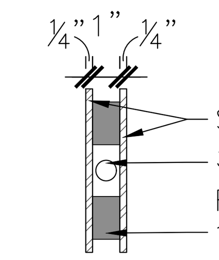

SECTION @ ARM
NTS

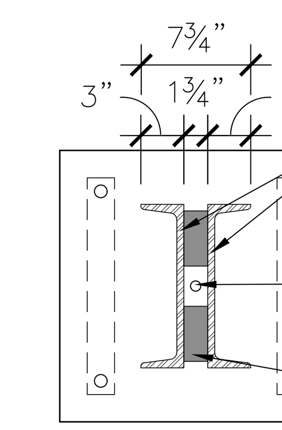

PLAN VIEW
NTS

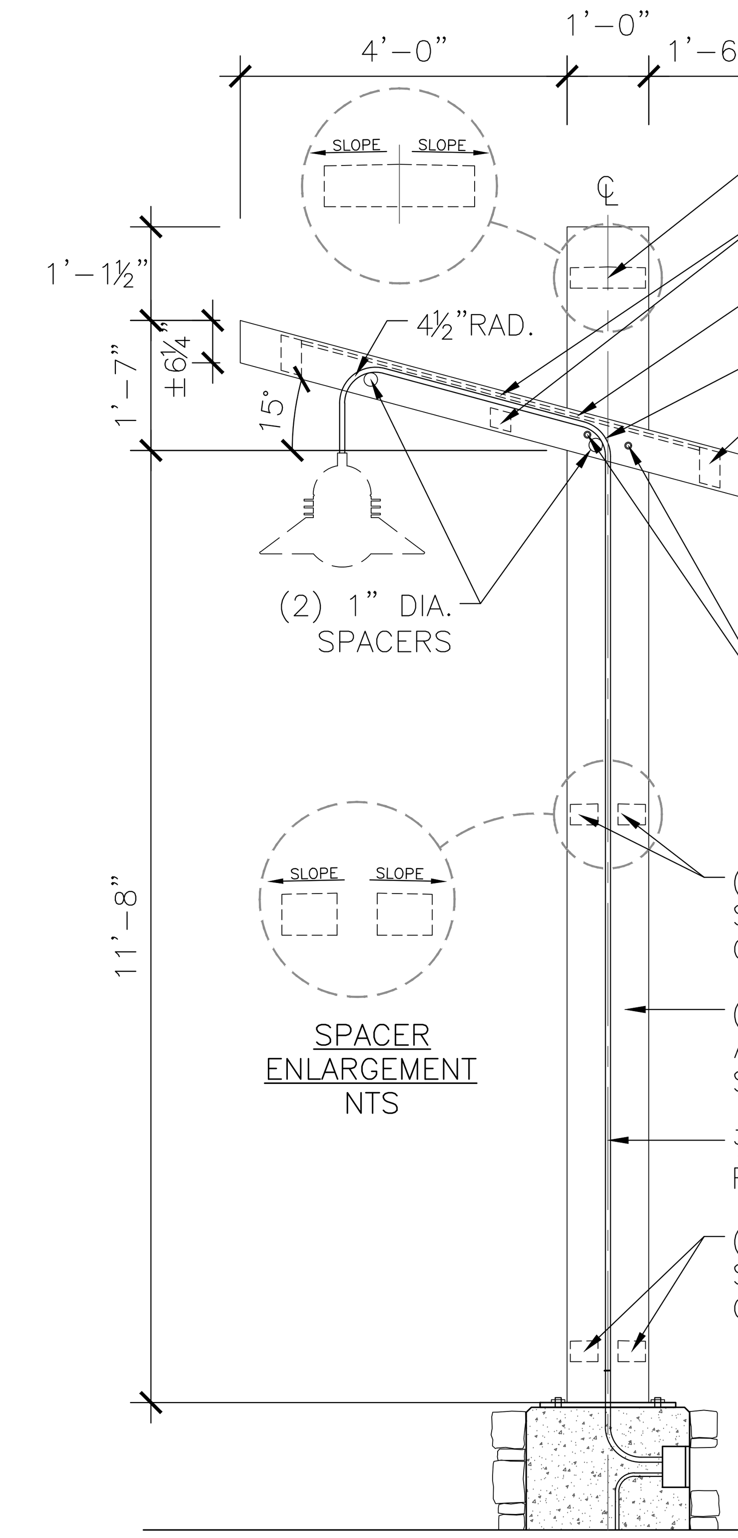

SPACER ENLARGEMENT
NTS

SIDE ELEVATION

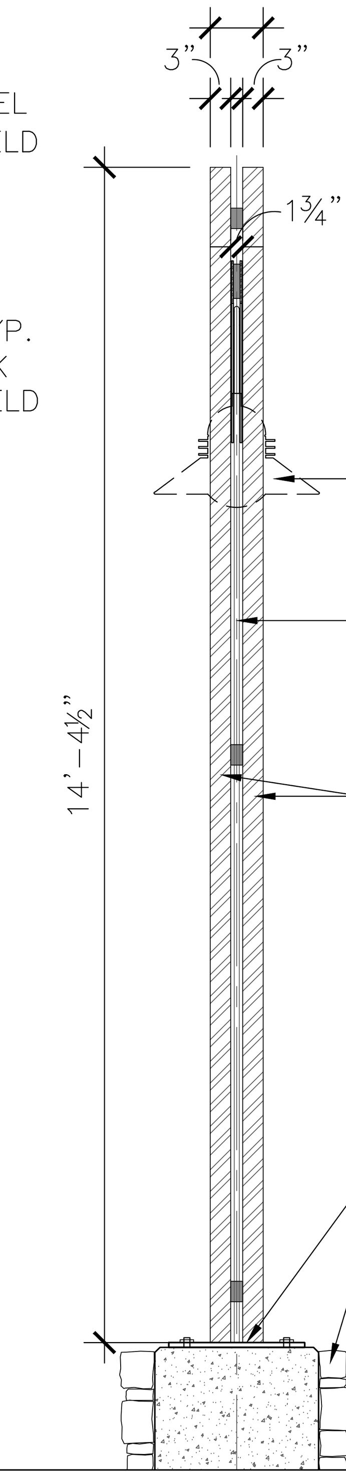

FRONT ELEVATION

NOTES:
1. PLAN AND DRAWINGS REFLECT DESIGN INTENT, SHOP DRAWINGS TO BE PROVIDED BY CONTRACTOR FOR APPROVAL BY OWNER'S REPRESENTATIVE PRIOR TO CONSTRUCTION.
2. CONTRACTOR SHALL PROVIDE CONDUIT, JUNCTION BOX, AND ASSOCIATED ELECTRICAL FOR LIGHT POLE OPERATION.
3. FIELD VERIFY PLACEMENT OF JUNCTION BOX WITH OWNER'S REPRESENTATIVE PRIOR TO CONSTRUCTION.
4. CAST CONCRETE BASE OVER DRILLED CAISSON FOUNDATION. CHAMFER ALL CORNERS 3/4" ALL REINFORCING STEEL IN CONCRETE BASE SHALL BE EPOXY COATED. CAISSON STEEL MAY BE PLAIN BLACK BAR.
5. REFERENCE SPECIFICATIONS FOR STONE TYPE, COLOR, STYLE.

05 PEDESTRIAN LIGHT - STRUCTURE

1/2"=1'-0"

w e n k
ASSOCIATES
PLANNERS & LANDSCAPE ARCHITECTS
303.628.0003

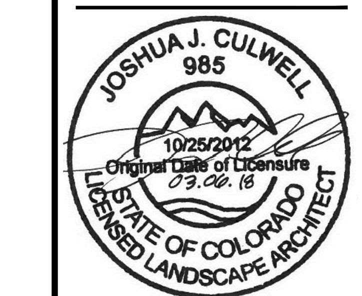

WATERPROOFING / RENOVATION - PHASE 2
TORIAN PLUM PARKING STRUCTURE
STEAMBOAT SPRINGS, CO

Date	10.22.18
Drawn By	BP
Reviewed by	JC
Job No.	16021.01

Revisions

Name	Date
ADDENDUM A	01/05/18
ADDENDUM 4	01/19/18
BLDG DEPT #1	03/06/18

Issue: 100% Construction Documents

Sheet Title: Site Details

Sheet Number

L3.4

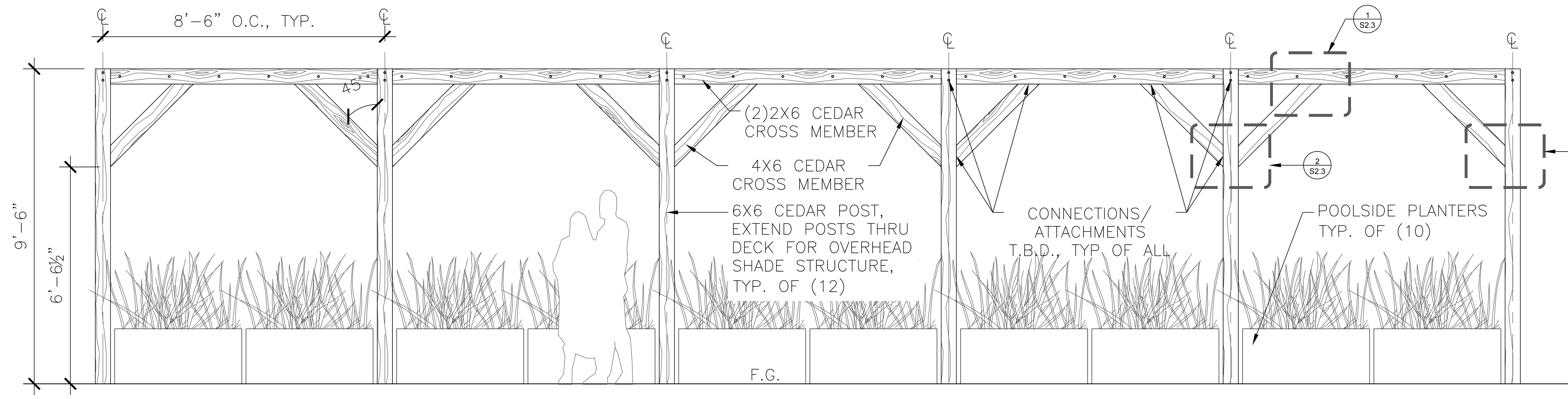

ELEVATION A – SHADE STRUCTURE
3/8"=1'-0"

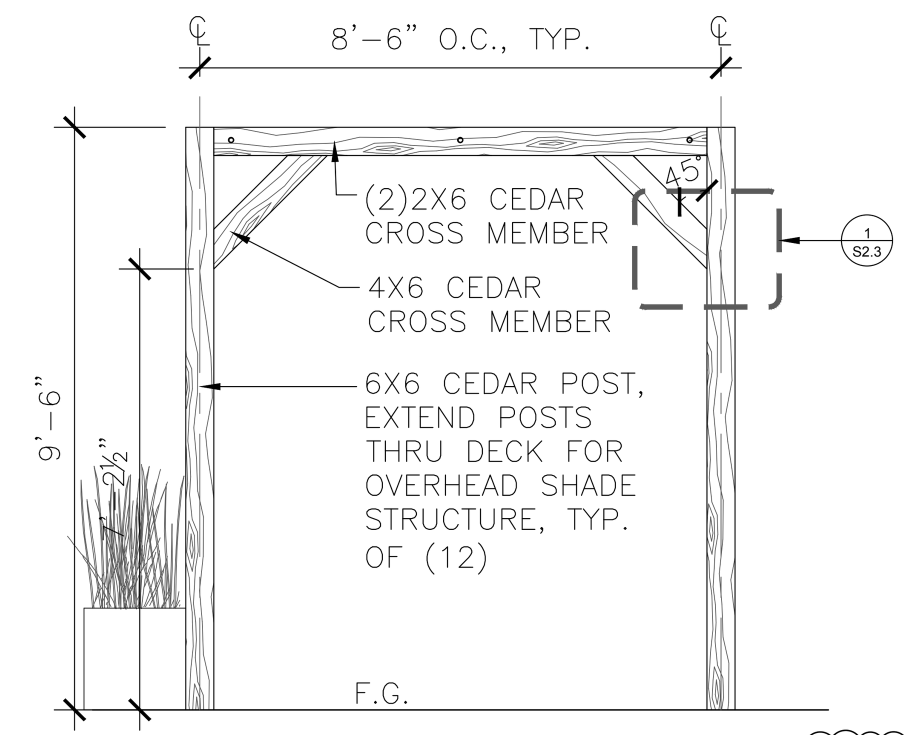

ELEVATION B – SHADE STRUCTURE
3/8"=1'-0"

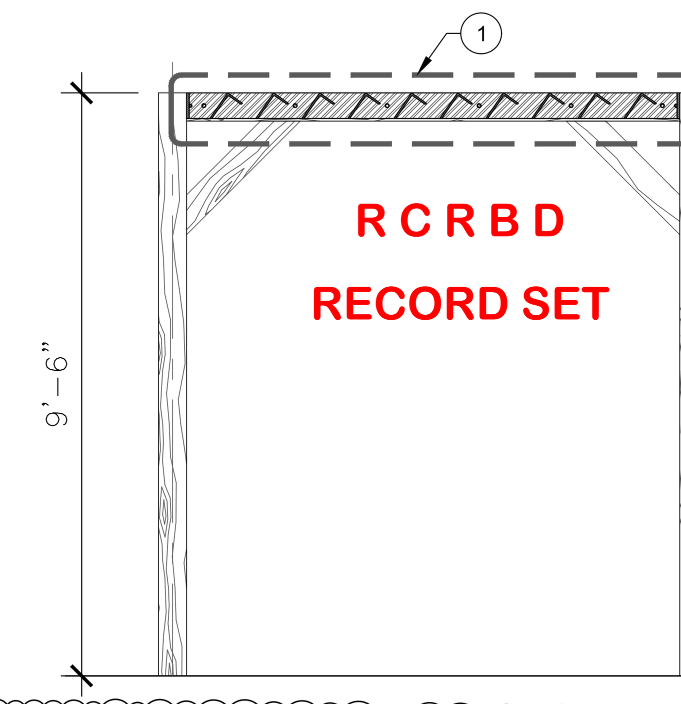

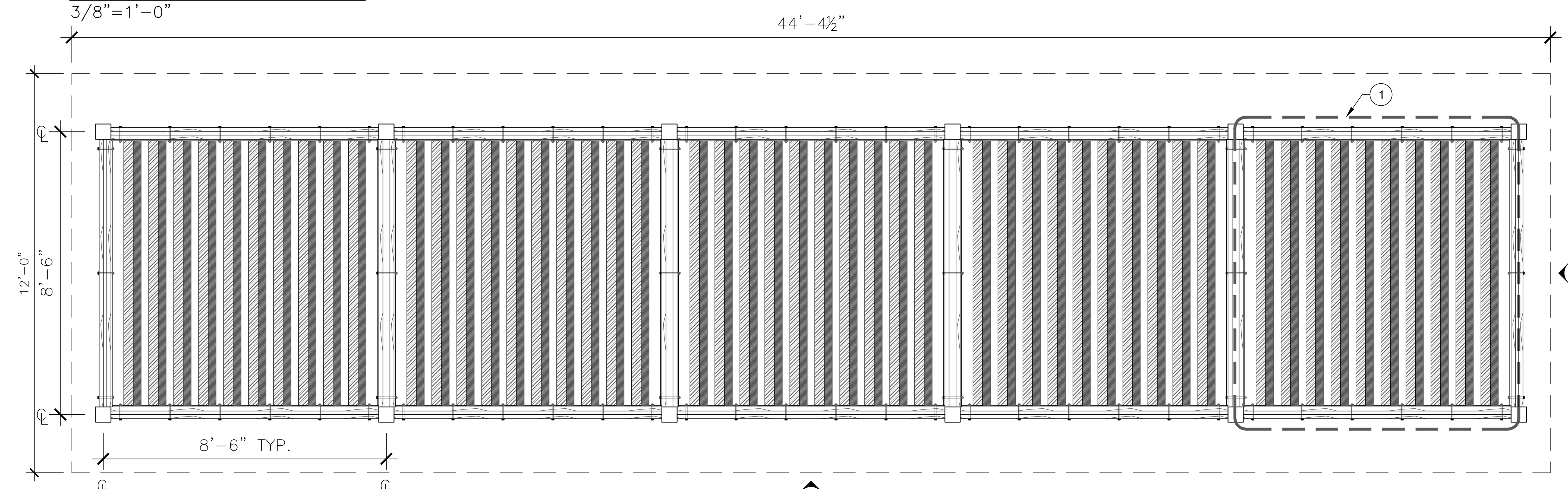

OVERHEAD SHADE STRUCTURE PLAN
3/8"=1'-0"

SHADE STRUCTURE DESIGNER:
MARTIN/MARTIN INC. (ENGINEER OF RECORD)
WENK ASSOCIATES (LANDSCAPE ARCHITECT)

DESIGN CRITER NOTES, REFERENCE S0.1.

STRUCTURAL WOOD FRAMING, REFERENCE GENERAL NOTES ON SHEET S0.1

CONCRETE REFERENCE CONCRETE MIX TABLE

CONCRETE REINFORCING AND ANCHORING REFERENCE GENERAL NOTES AND TABLE OF LAP LENGTHS AND SPECIFICATIONS ON SHEET S0.1

CHARACTER IMAGERY

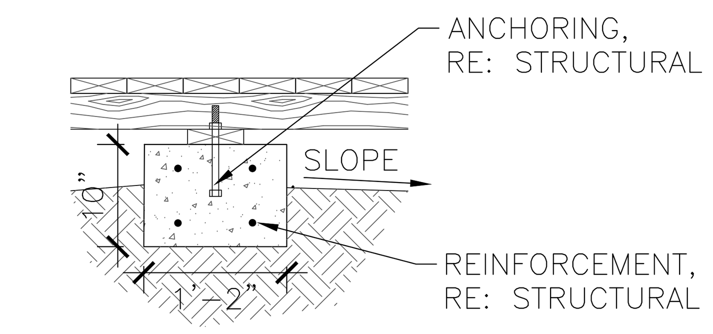

FOUNDATION SECTION
1/2"=1'-0"

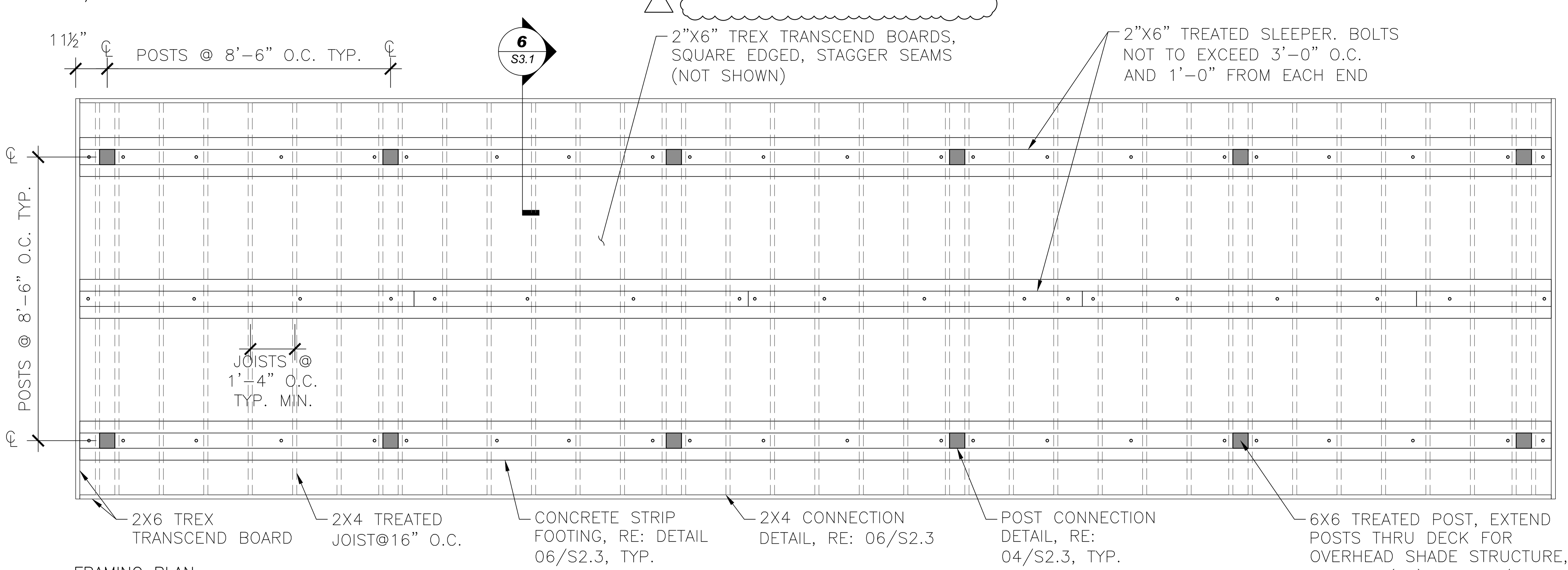

FRAMING PLAN
3/8"=1'-0"

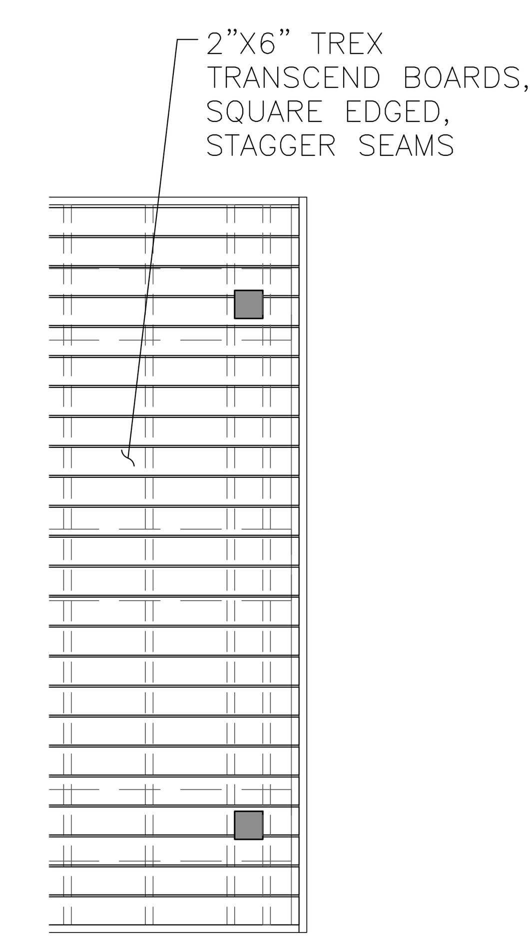

DECKING PLAN
3/8"=1'-0"

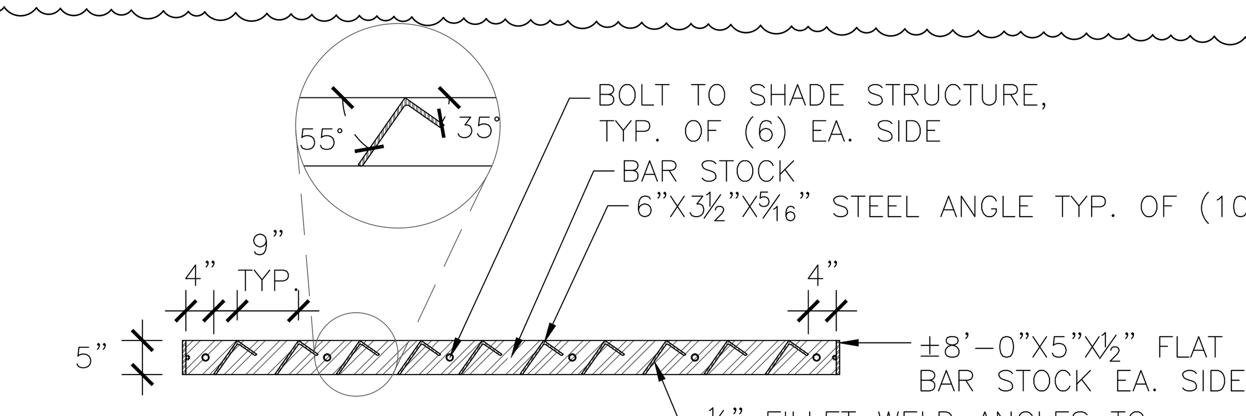

SECTION C – LOUVER ASSEMBLY
1/2"=1'-0"

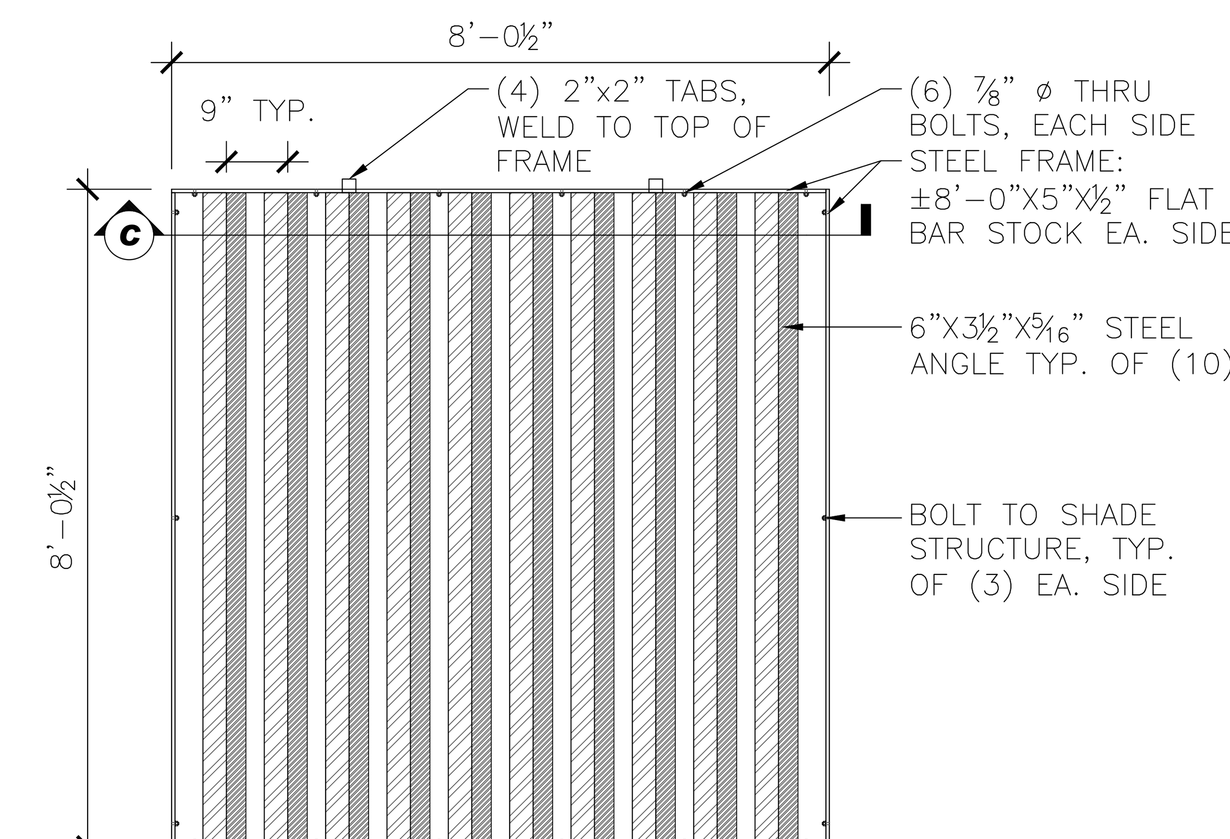

PLAN 1 – LOUVER ASSEMBLY
1/2"=1'-0"

NOTES:
1. PLAN AND DRAWINGS REFLECT DESIGN INTENT, SHOP DRAWINGS TO BE PROVIDED BY CONTRACTOR FOR APPROVAL BY OWNER'S REPRESENTATIVE PRIOR TO CONSTRUCTION.
2. CONTRACTOR IS RESPONSIBLE FOR REPORTING ANY CONSTRUCTABILITY ISSUES REGARDING THE OVERHEAD STRUCTURE AND DECK COMPONENTS TO ARCHITECT PRIOR TO SUBMITTING SHOP DRAWINGS.
3. ALL VISIBLE DECKING IS TO BE TREX TRANSCEND.
4. APPLY STAIN (SHERWIN WILLIAMS #3531 BLUE SHADOW) TO WOOD OVERHEAD SHADE STRUCTURE. PRIOR TO CONSTRUCTION CONTRACTOR TO SUBMIT STAIN TO OWNER'S REPRESENTATIVE FOR APPROVAL.

01 POOL AREA DECK AND SHADE STRUCTURE
3/8"=1'-0"

wenk ASSOCIATES
PLANNERS & LANDSCAPE ARCHITECTS
303.628.0003

JOSHUA J. CULWELL 985 10/25/2012 Original Date of Licensure STATE OF COLORADO LICENSED LANDSCAPE ARCHITECT

WATERPROOFING / RENOVATION · PHASE 2
TORIAN PLUM PARKING STRUCTURE
STEAMBOAT SPRINGS, CO

Date	10.22.18
Drawn By	BP
Reviewed by	JC
Job No.	16021.01

Revisions

Name	Date
ADDENDUM 4	01/19/18
BLDG DEPT #1	03/06/18
BLDG DEPT #2	04/18/18

Issue: 100% Construction Documents
Sheet Title: Site Details
Sheet Number
L3.5

RCRBD

RECORD SET

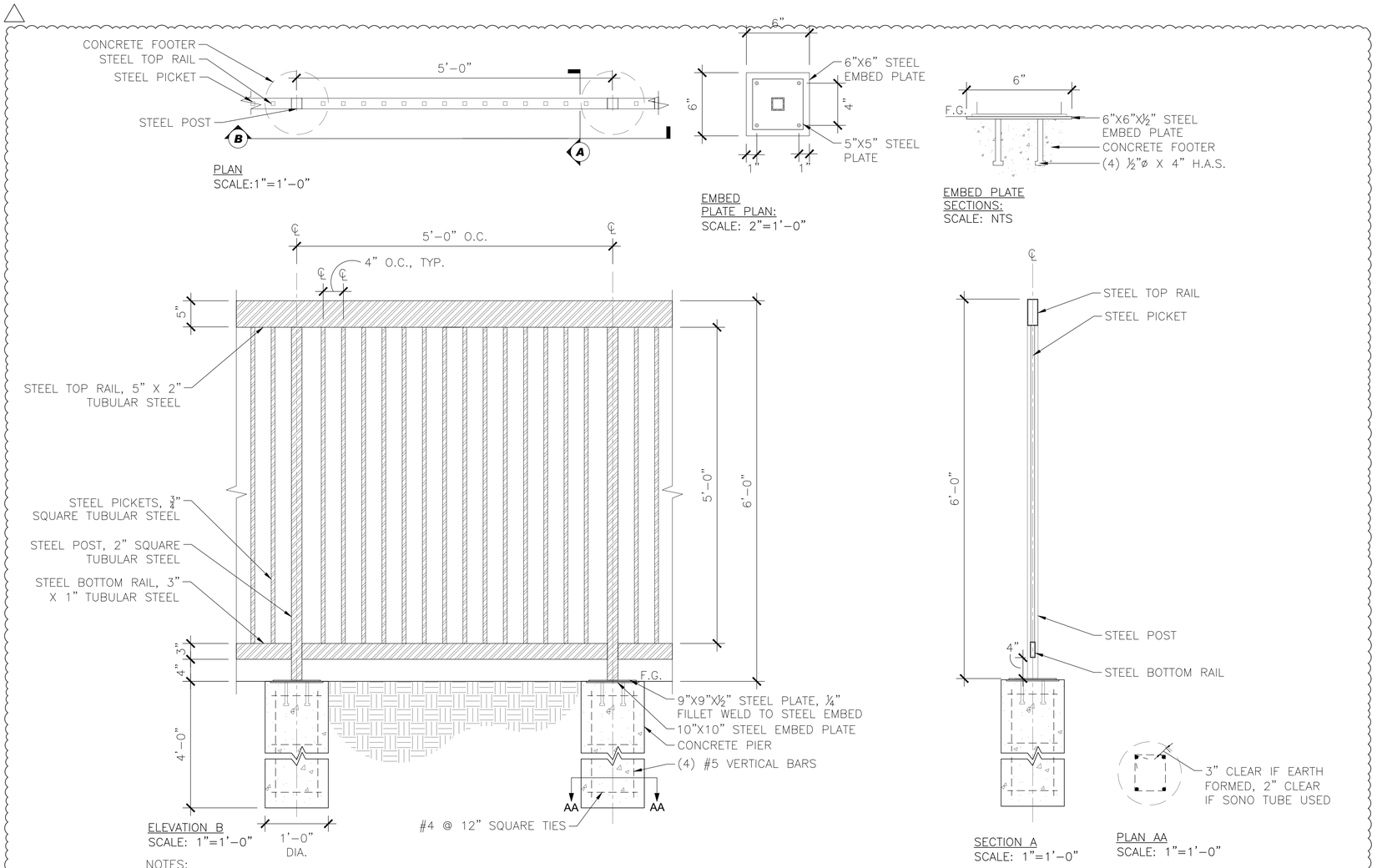

NOTES:

1. REFERENCE SPECIFICATIONS FOR METAL TYPE & FINISH.
2. CONTRACTOR SHALL PROVIDE SHOP DRAWINGS OF RAILINGS & WELDS FOR APPROVAL BY OWNER'S REP. PRIOR TO CONSTRUCTION. DESIGN OF CONNECTIONS & WELDS BY FABRICATOR, UNLESS OTHERWISE NOTED.
3. DRAWINGS TO REFLECT DESIGN INTENT. CONTRACTOR SHALL DEVELOP PROPOSED FABRICATION UNIT SECTIONS AND INTERFACING CONNECTION, AND PROVIDE ALL NECESSARY ACCESSORIES, ATTACHMENTS, & WELDS.
4. ALL FENCING SHALL BE CONSTRUCTED IN ACCORDANCE WITH ALL APPLICABLE CODES AND STANDARDS.
5. CONTRACTOR SHALL GRIND AND SMOOTH EDGES TO MINIMIZE BURRS AND POINTS.
6. CONTRACTOR TO COORDINATE WITH OWNERS REPRESENTATIVE STEEL EMBEDMENT PLATE LOCATIONS PRIOR TO ANY CONCRETE POURING RELEVANT TO FENCING LOCATIONS.
7. FENCE SHALL BE LEVEL AND PLUMB.

01 POOL FENCE - EXISTING
1"=1'-0"

w e n k
ASSOCIATES
PLANNERS & LANDSCAPE ARCHITECTS
303.628.0003

JOSHUA J. CULWELL 985
10/25/2012
Original Date of Licensure
19.CR.18
STATE OF COLORADO
LICENSED LANDSCAPE ARCHITECT

WATERPROOFING / RENOVATION - PHASE 2
TORIAN PLUM PARKING STRUCTURE
STEAMBOAT SPRINGS, CO

Date	10.22.18
Drawn By	BP
Reviewed by	JC
Job No.	16021.01

Revisions

Name	Date
ADDENDUM A	01/05/18
BLDG DEPT #1	03/06/18

Issue:
100% Construction Documents

Sheet Title:
Site Details

Sheet Number
L3.6

NOTES:

MANUFACTURER: NICE PLANTER

CONTACT: NICE PLANTER LLC
206.486.0936
INFO@NICEPLANTER.COM

PRODUCT: NICE CORTEN STEEL TROUGH

DIMENSION: 20"X46"X20"

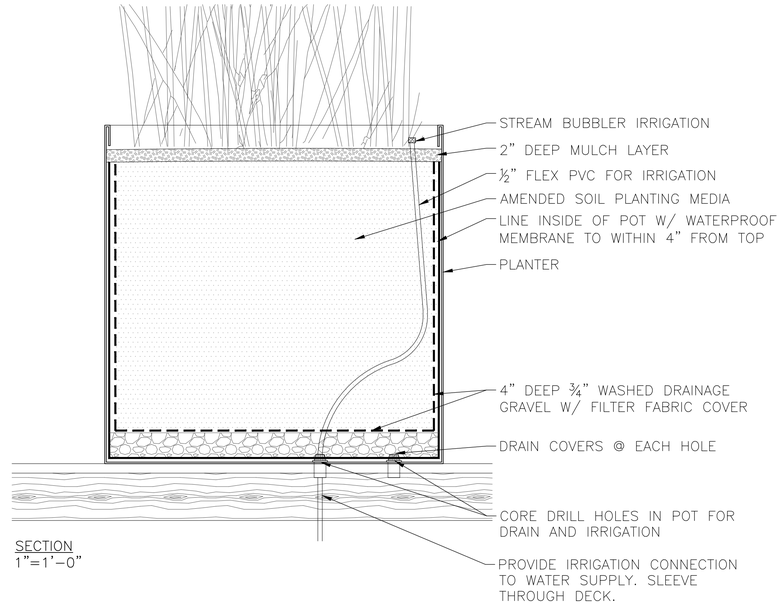

SECTION
1"=1'-0"

01 POOL SIDE PLANTER
1"=1'-0"

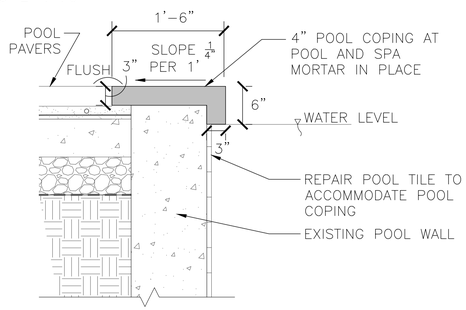

SECTION AT POOL EDGE

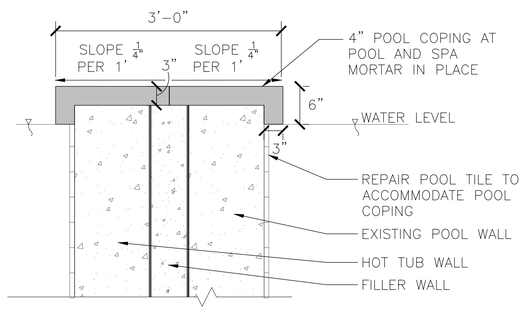

SECTION AT POOL EDGE & HOT TUB

03 POOL COPING
1"=1'-0"

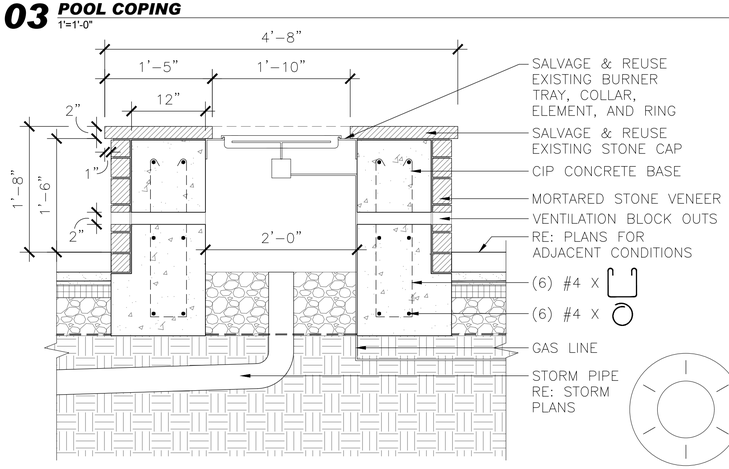

STONE VENEER GAS FIRE PIT
1"=1'-0"

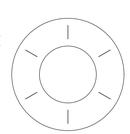

PLAN VIEW – REBAR
N.T.S.

04 FIRE PIT
1"=1'-0"

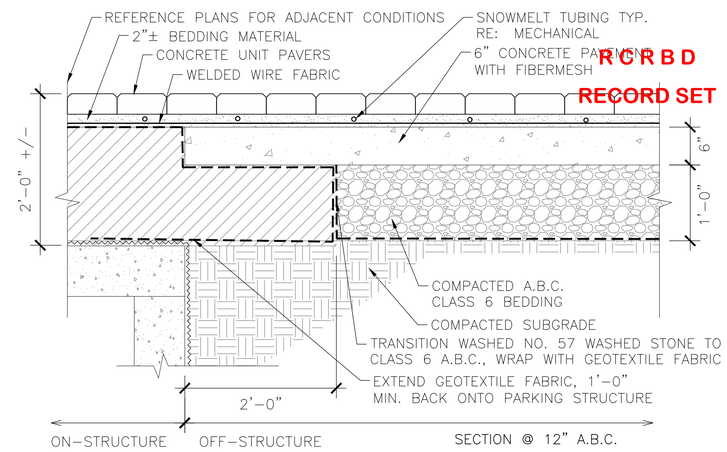

SECTION @ 12" A.B.C.

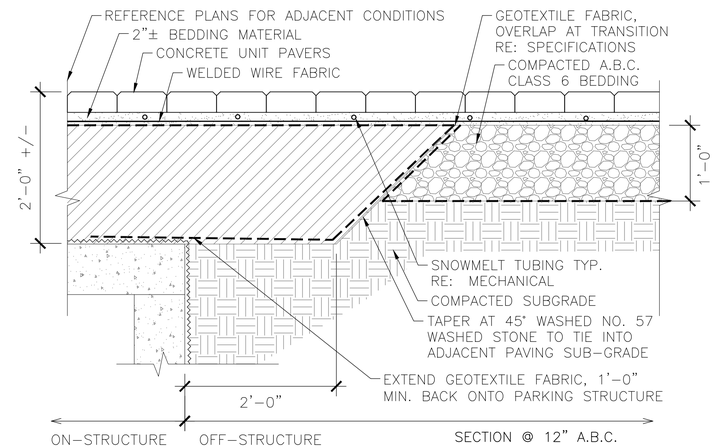

SECTION @ 12" A.B.C.

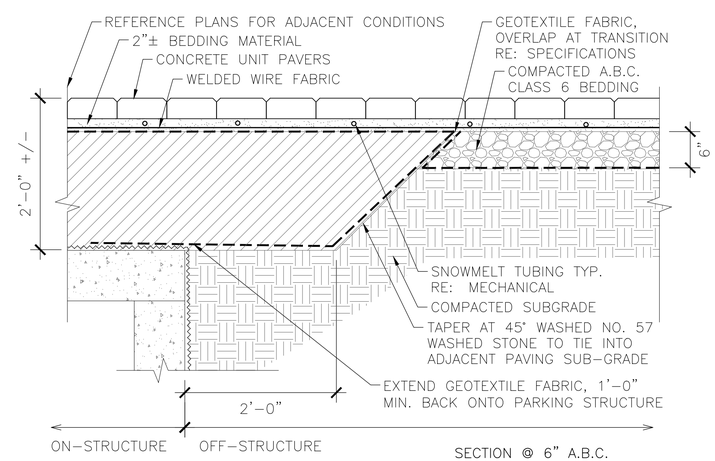

SECTION @ 6" A.B.C.

NOTES:
1. REFERENCE DETAIL 01/L3.0 CONCRETE UNIT PAVERS – OFF STRUCTURE FOR NOTES.

02 CONCRETE UNIT PAVERS - TRANSITION OFF STRUCTURE
1"=1'-0"

RCRBD
RECORD SET

w e n k
ASSOCIATES
PLANNERS & LANDSCAPE ARCHITECTS
303.628.0003

JOSHUA J. CULWELL 985
10/25/2012
Original Date of Licensure
STATE OF COLORADO
LICENSED LANDSCAPE ARCHITECT

WATERPROOFING / RENOVATION - PHASE 2
TORIAN PLUM PARKING STRUCTURE
STEAMBOAT SPRINGS, CO

Date	10.22.18
Drawn By	BP
Reviewed by	JC
Job No.	16021.01

Revisions

Name	Date
ADDENDUM A	01/05/18
ADDENDUM 4	01/19/18
BLDG DEPT #1	03/06/18

Issue:
100% Construction Documents

Sheet Title:
Site Details

Sheet Number
L3.7

RCRBD

RECORD SET

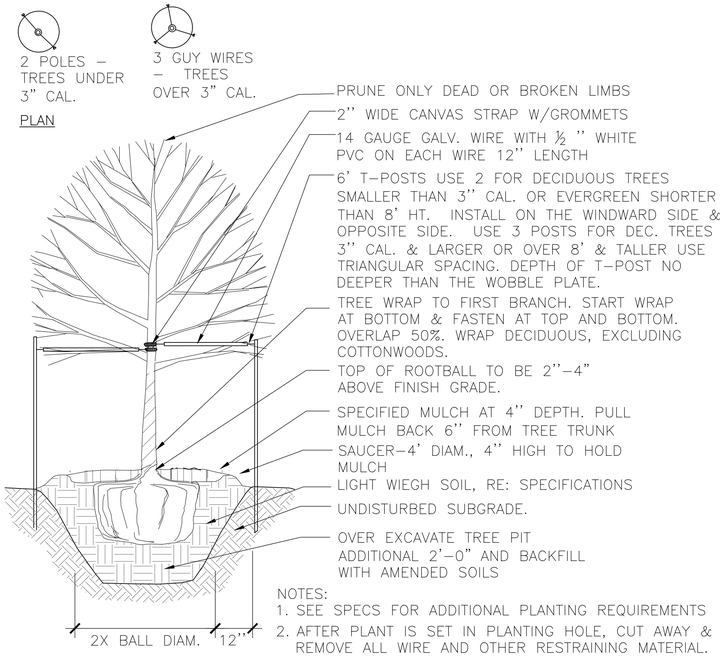

NOTES:
1. SEE SPECS FOR ADDITIONAL PLANTING REQUIREMENTS
2. AFTER PLANT IS SET IN PLANTING HOLE, CUT AWAY & REMOVE ALL WIRE AND OTHER RESTRAINING MATERIAL. CUT AND REMOVE 2/3RDS OF BURLAP FROM ROOTBALL. SCORE ROOTBALL AND PIT WALLS.

01 TREE PLANTING
1"=1'-0"

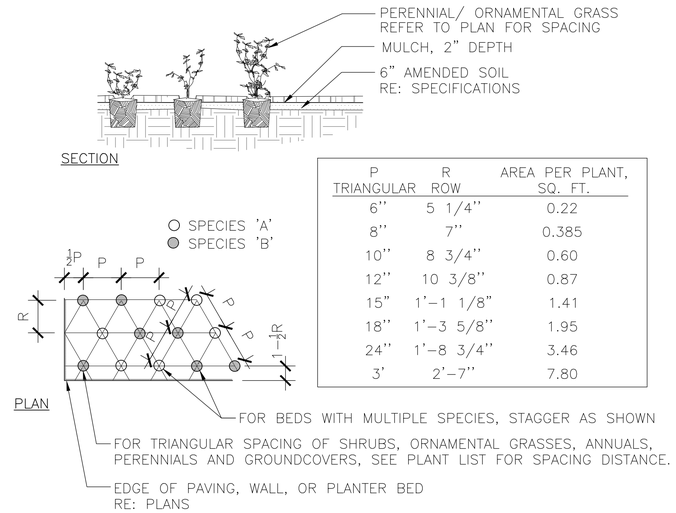

P TRIANGULAR	R ROW	AREA PER PLANT, SQ. FT.
6"	5 1/4"	0.22
8"	7"	0.385
10"	8 3/4"	0.60
12"	10 3/8"	0.87
15"	1'–1 1/8"	1.41
18"	1'–3 5/8"	1.95
24"	1'–8 3/4"	3.46
3'	2'–7"	7.80

02 ORNAMENTAL GRASS/PERENNIAL PLANTING
1"=1'-0"

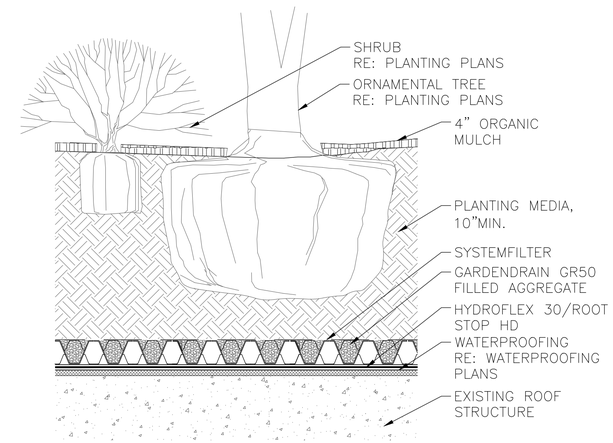

NOTES:
1. REFERENCE SPECIFICATIONS FOR ADDITIONAL INFORMATION.
2. ADDITIONAL COMBINATIONS OF GARDEN ROOF ASSEMBLY COMPONENTS ARE POSSIBLE TO FIT SPECIFIC PROJECT PARAMETERS.

03 INTENSIVE GARDEN ROOF ASSEMBLY
1"=1'-0"

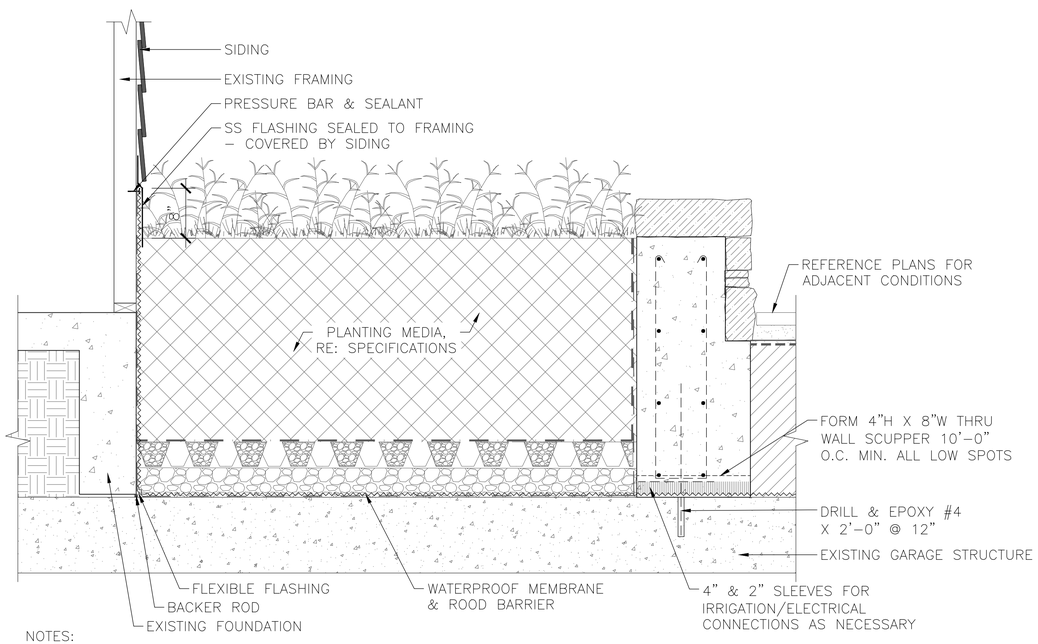

NOTES:
1. REFERENCE SPECIFICATIONS FOR CONCRETE FINISH AND COLOR.
2. REFERENCE GRADING PLAN FOR TOP OF WALL ELEVATIONS. CONTRACTOR SHALL VERIFY WALL ELEVATIONS WITH OWNER'S REPRESENTATIVE PRIOR TO CONSTRUCTION.
3. STONE SHALL BE SET IN MORTAR, NO MORTAR SHALL BE VISIBLE, DEEP RAKE MORTAR ALL JOINTS.

04 LANDSCAPE PLANTER - ON STRUCTURE
1"=1'-0"

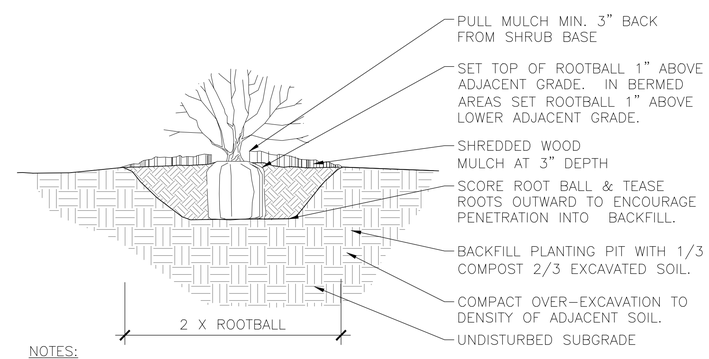

NOTES:
1. SEE SPECS FOR ADDITIONAL PLANTING REQUIREMENTS.
2. PLUMB AND ORIENT PLANTS FOR BEST APPEARANCE.
3. REMOVE ALL TWINE FROM ROOT BALL, AND FOLD BURLAP BACK 2/3.
4. REMOVE PLASTIC BURLAP ENTIRELY. FOR CONTAINER SHRUBS, CAREFULLY REMOVE CONTAINER AND SCORE ROOT BALL.
5. SEE PLANTING PLAN FOR MORE INFORMATION.

05 SHRUB PLANTING
1"=1'-0"

w e n k
ASSOCIATES
PLANNERS & LANDSCAPE ARCHITECTS
303.628.0003

JOSHUA J. CULWELL 985
10/25/2012
Original Date of Licensure
STATE OF COLORADO
LICENSED LANDSCAPE ARCHITECT

WATERPROOFING / RENOVATION - PHASE 2

TORIAN PLUM PARKING STRUCTURE

STEAMBOAT SPRINGS, CO

Date 10.22.18
Drawn By BP
Reviewed by JC
Job No. 16021.01

Revisions

Name	Date
BLDG DEPT #1	03/06/18

Issue:
100% Construction Documents

Sheet Title:
Planting Details

Sheet Number
L3.8

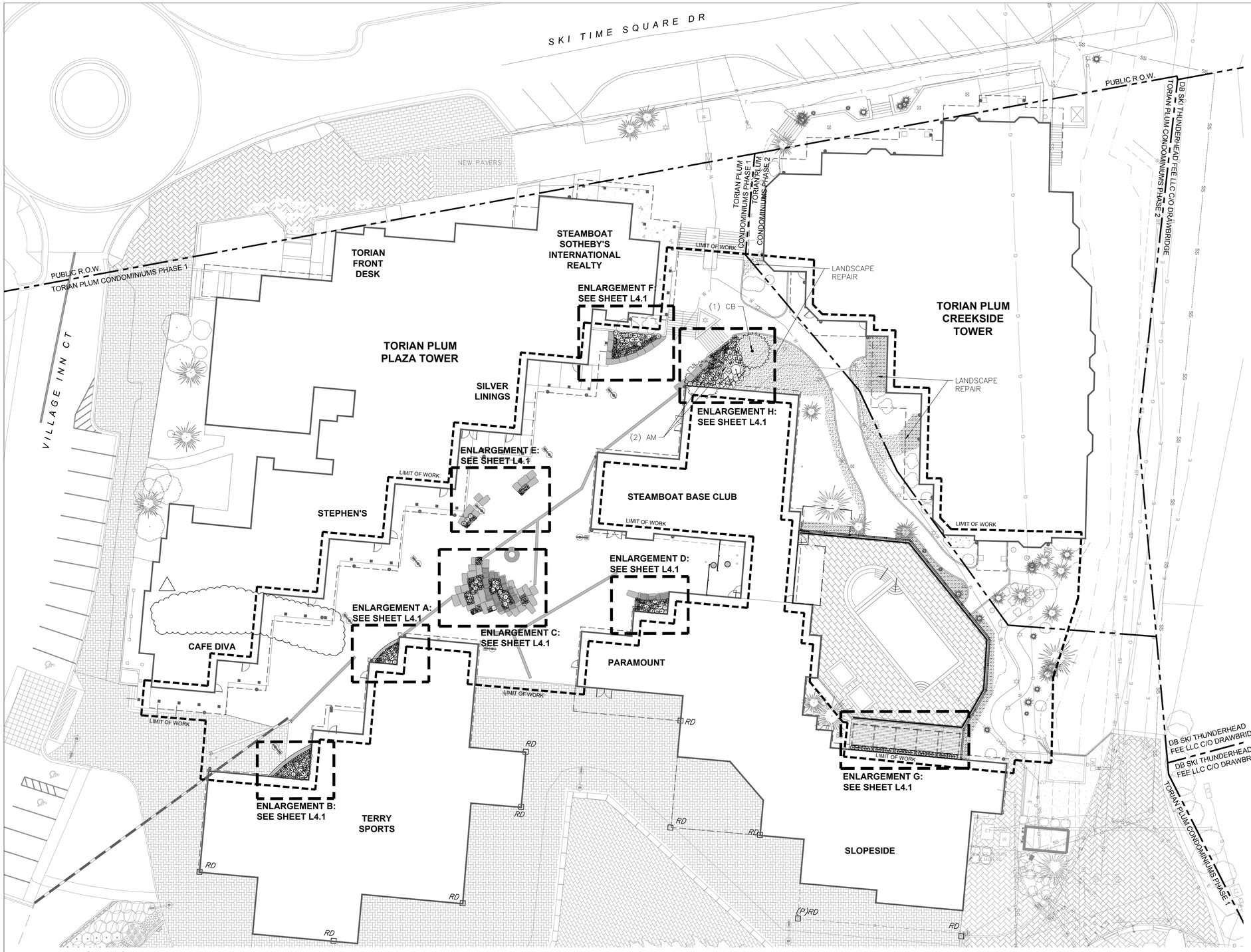

RCRBD

RECORD SET

PLANTING NOTES

1. THE CONTRACTOR SHALL SUPPLY ALL PLANTS IN QUANTITIES SUFFICIENT TO COMPLETE THE WORK SHOWN ON THE PLAN. SHOULD ANY DISCREPANCIES EXIST BETWEEN QUANTITIES SHOWN IN THE PLANT LIST AND THOSE SHOWN IN THE DRAWINGS, THE DRAWINGS SHALL TAKE PRECEDENCE.
2. ALL PLANT MATERIAL SHALL BE REVIEWED BY THE OWNER'S REPRESENTATIVE PRIOR TO INSTALLATION. CONTRACTOR SHALL INSURE PLANT MATERIAL MEET THE SPECIFICATIONS OF THE AMERICAN STANDARDS FOR NURSERY STOCK (LATEST EDITION) AS SET FORTH BY THE AMERICAN ASSOCIATION OF NURSERYMEN.
3. CONTRACTOR SHALL FURNISH PLANT MATERIALS FREE OF PESTS OR PLANT DISEASES. PRESELECTED OR "TAGGED" MATERIAL MUST BE INSPECTED BY THE CONTRACTOR AND CERTIFIED PEST AND DISEASE FREE. IT IS THE CONTRACTOR'S OBLIGATION TO WARRANTY ALL PLANT MATERIALS PER THE SPECIFICATIONS.
4. TREES HAVE HORIZONTAL LAYOUT RELATIONSHIP TO BUILDING FEATURES SUCH AS DOORS AND WINDOWS. CONTRACTOR SHALL REVIEW LAYOUT WITH OWNER'S REP. TO DETERMINE CONFLICTS OR INTERFERENCE PRIOR TO STAKING. CONTRACTOR SHALL STAKE PLANT LOCATIONS FOR THE REVIEW BY THE OWNER'S REPRESENTATIVE, PRIOR TO DIGGING PLANTING PITS. THE CONTRACTOR SHALL RELOCATE ANY PLANT AS DIRECTED BY THE OWNER'S REPRESENTATIVE PRIOR TO PLANTING AT NO ADDITIONAL COST TO THE OWNER.
5. ALL LANDSCAPE PLANTING AREAS SHALL BE COVERED WITH A MINIMUM OF 4 INCH DEPTH MULCH AS SPECIFIED. SUBMIT SAMPLE TO OWNER'S REPRESENTATIVE PRIOR TO INSTALLATION.
6. CONTRACTOR SHALL SOD AND MULCH ALL LANDSCAPE AREAS NOTED WITHIN THE CONSTRUCTION LIMITS. ANY LANDSCAPE AREAS BEYOND DISTURBED BY CONSTRUCTION OPERATIONS, NOT DIRECTED BY OWNER'S REPRESENTATIVE, SHALL BE REPAIRED OR REPLACED AT THE CONTRACTOR'S EXPENSE. THE CONTRACTOR SHALL CONFINE ALL OPERATIONS TO THE CONSTRUCTION LIMITS SHOWN. THE CONTRACTOR WILL STAKE THE SODDING LIMITS AND OBTAIN REVIEW FROM THE OWNER'S REPRESENTATIVE PRIOR TO SODDING.
7. CONTAMINATION OF IN PLACE PLANTING MIX/TOPSOIL DURING CONSTRUCTION WILL REQUIRE COMPLETE REPLACEMENT AT CONTRACTOR'S EXPENSE.
8. CONTRACTOR SHALL EVALUATE EXISTING PLANT MATERIAL DESIGNATED FOR REMOVAL WITH OWNER'S REPRESENTATIVE.

SITE DETAIL KEYNOTES

PLANTING	
TREE PLANTING	01/L3.8
ORNAMENTAL GRASS / PERENNIAL PLANTING	02/L3.8
INTENSIVE GARDEN ROOF ASSEMBLY	03/L3.8
LANDSCAPE PLANTER - ON STRUCTURE	04/L3.8
SHRUB PLANTING	05/L3.8

DESIGN TEAM ASSUMES NO RESPONSIBILITY FOR UTILITY LOCATIONS. THE UTILITIES SHOWN ON THIS DRAWING HAVE BEEN PLOTTED FROM THE BEST AVAILABLE INFORMATION. IT IS, HOWEVER, THE CONTRACTORS RESPONSIBILITY TO FIELD VERIFY THE SIZE, MATERIAL, HORIZONTAL AND VERTICAL LOCATION OF ALL UTILITIES PRIOR TO THE COMMENCEMENT OF ANY CONSTRUCTION.

PLANTING LEGEND

- TURFGRASS SOD
- PLANTING AREA– BY OWNER
- LIMIT OF WORK
- LANDSCAPE REPAIR
- EXISTING TREES
- ORNAMENTAL GRASSES/ PERENNIAL
- DECIDUOUS TREE
- CONIFEROUS TREE
- SHRUB

PLANT SCHEDULE

TREES

QTY.	ABV.	BOTANICAL NAME	COMMON NAME	SIZE	SPACING
2	AM	POPULUS TREMULOIDES	MULTISTEM QUAKING ASPEN	4" CLUMP	AS SHOWN
1	CB	PICEA PUNGENS	COLORADO BLUE SPRUCE	8' HT	AS SHOWN

SHRUBS

QTY.	ABV.	BOTANICAL NAME	COMMON NAME	SIZE	SPACING
3	YTD	CORNUS STONONIFERA 'FLAVIRAMEA'	YELLOW TWIG DOGWOOD	#5	AS SHOWN
3	CSB	CORNUS SERICEA 'BAILEYI'	RED TWIG DOGWOOD	#5	AS SHOWN

NORTH

0 10 20 40

SCALE: 1"=20'-0"

weink ASSOCIATES
PLANNERS & LANDSCAPE ARCHITECTS
303.828.0003

JOSHUA J. CULWELL 985 10/25/2012 Original Date of Licensure 09.06.18 STATE OF COLORADO LICENSED LANDSCAPE ARCHITECT

WATERPROOFING / RENOVATION - PHASE 2
TORIAN PLUM PARKING STRUCTURE
STEAMBOAT SPRINGS, CO

Date 10.22.18
Drawn By BP
Reviewed by JC
Job No. 16021.01

Revisions

Name	Date
BLDG DEPT #1	03/06/18

Issue:
100% Construction Documents

Sheet Title:
Planting Plan

Sheet Number
L4.0

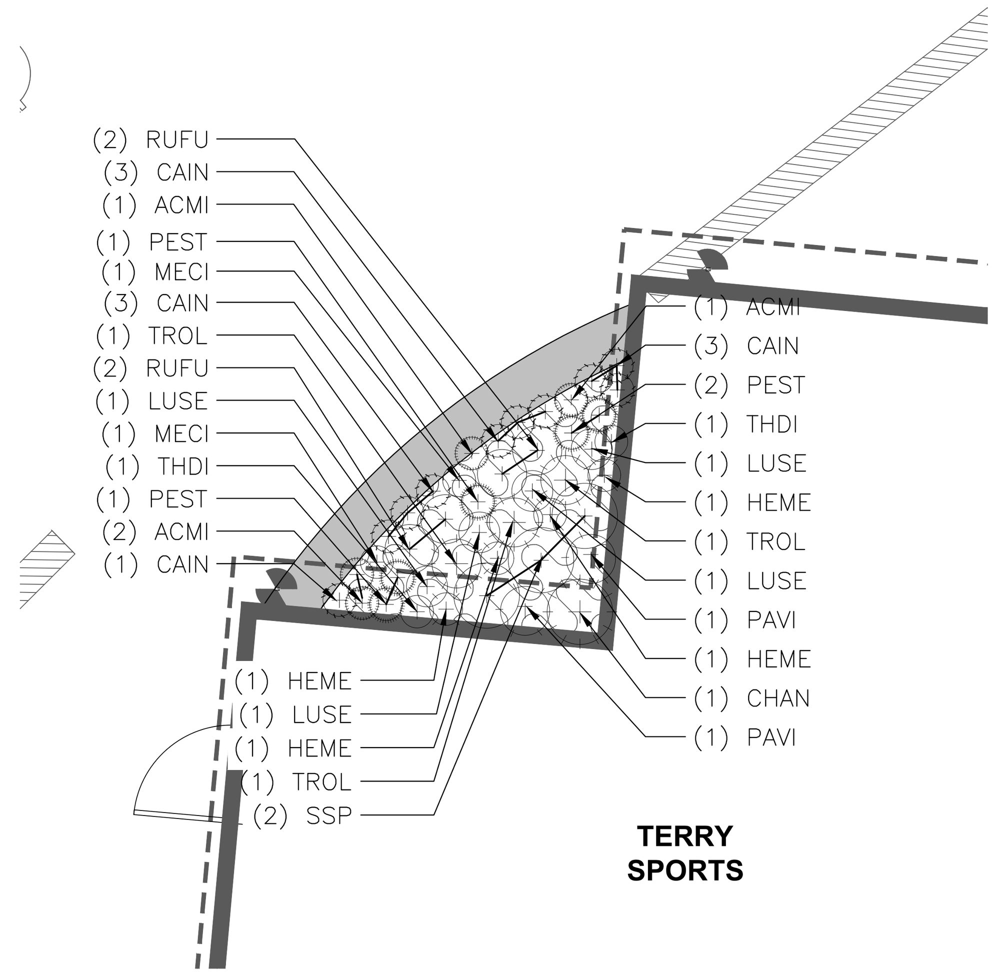

ENLARGEMENT A
1"=5'-0"

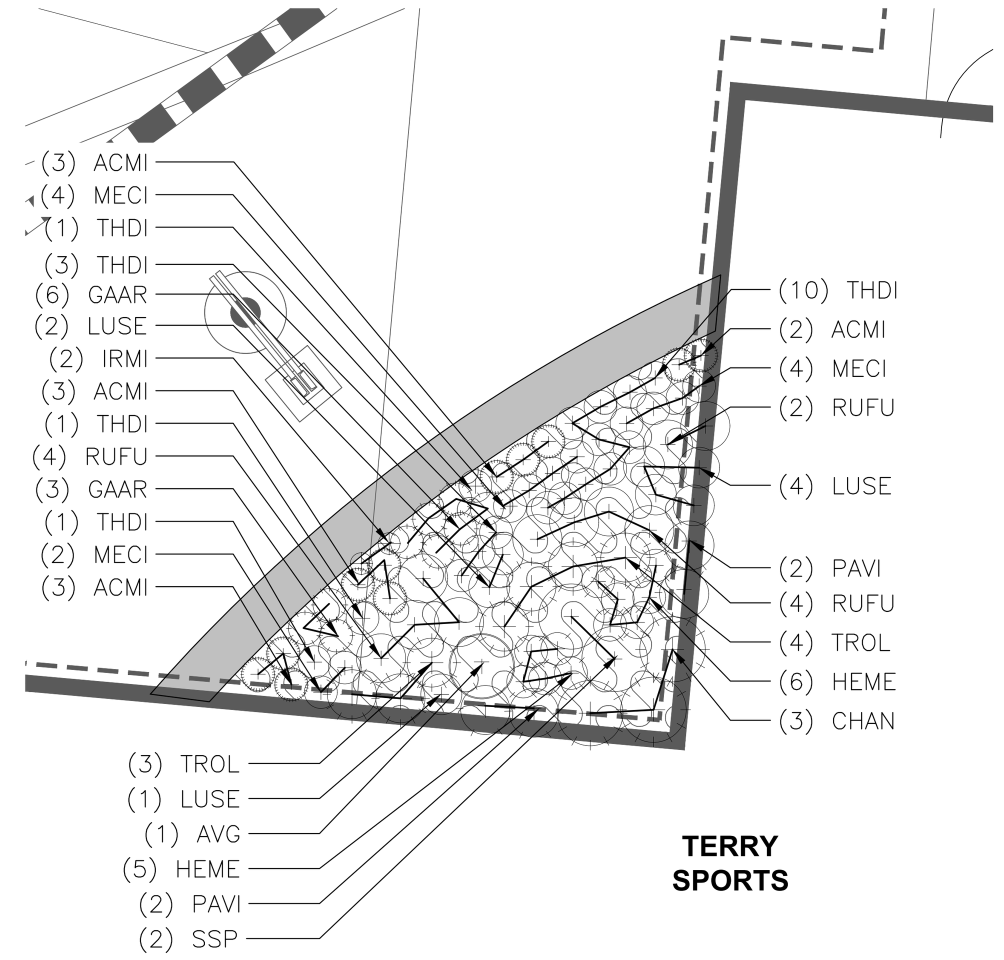

ENLARGEMENT B
1"=5'-0"

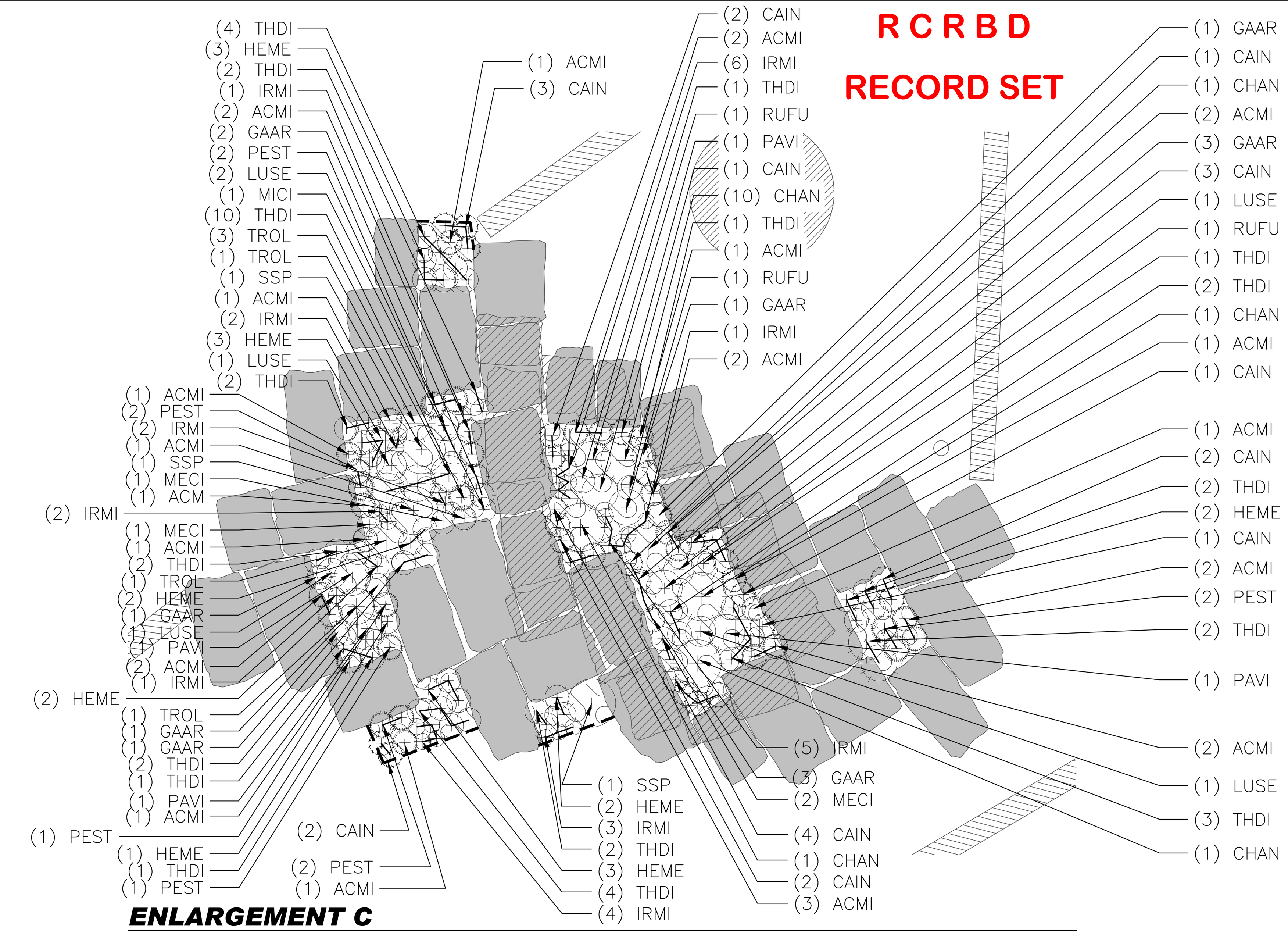

ENLARGEMENT C
1"=5'-0"

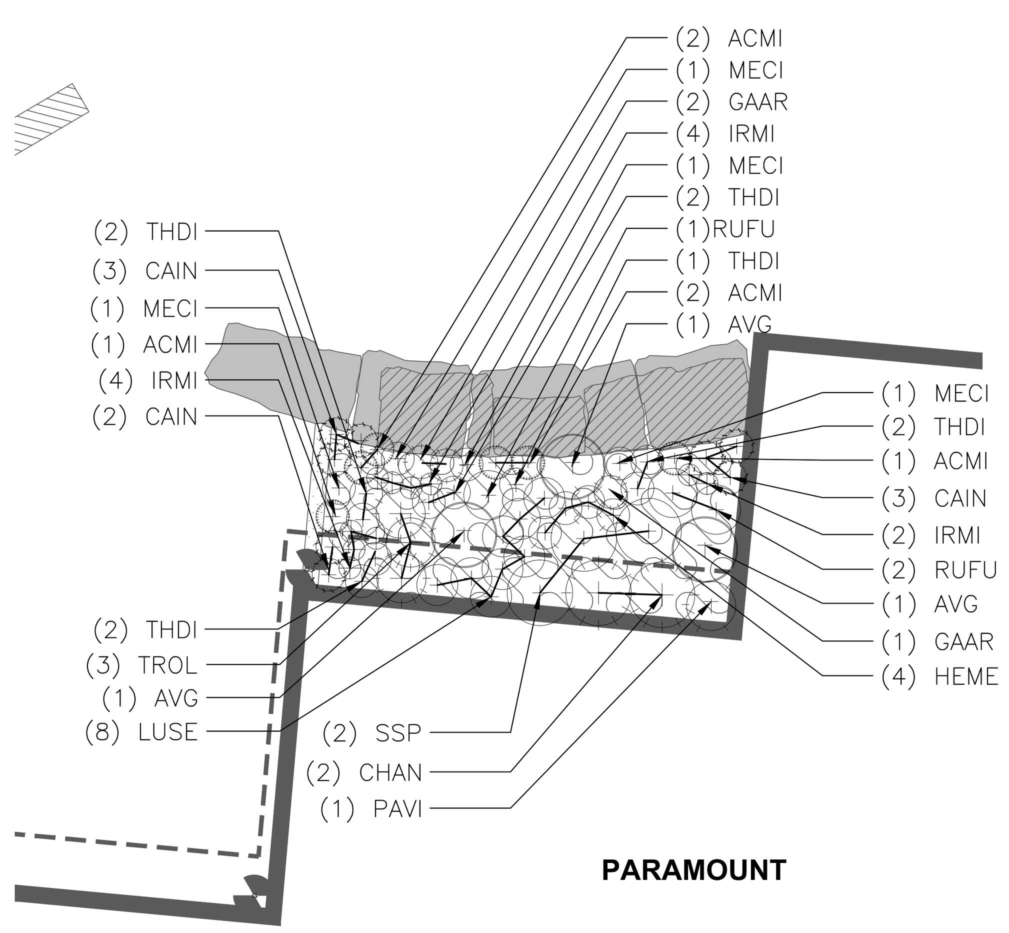

ENLARGEMENT D
1"=5'-0"

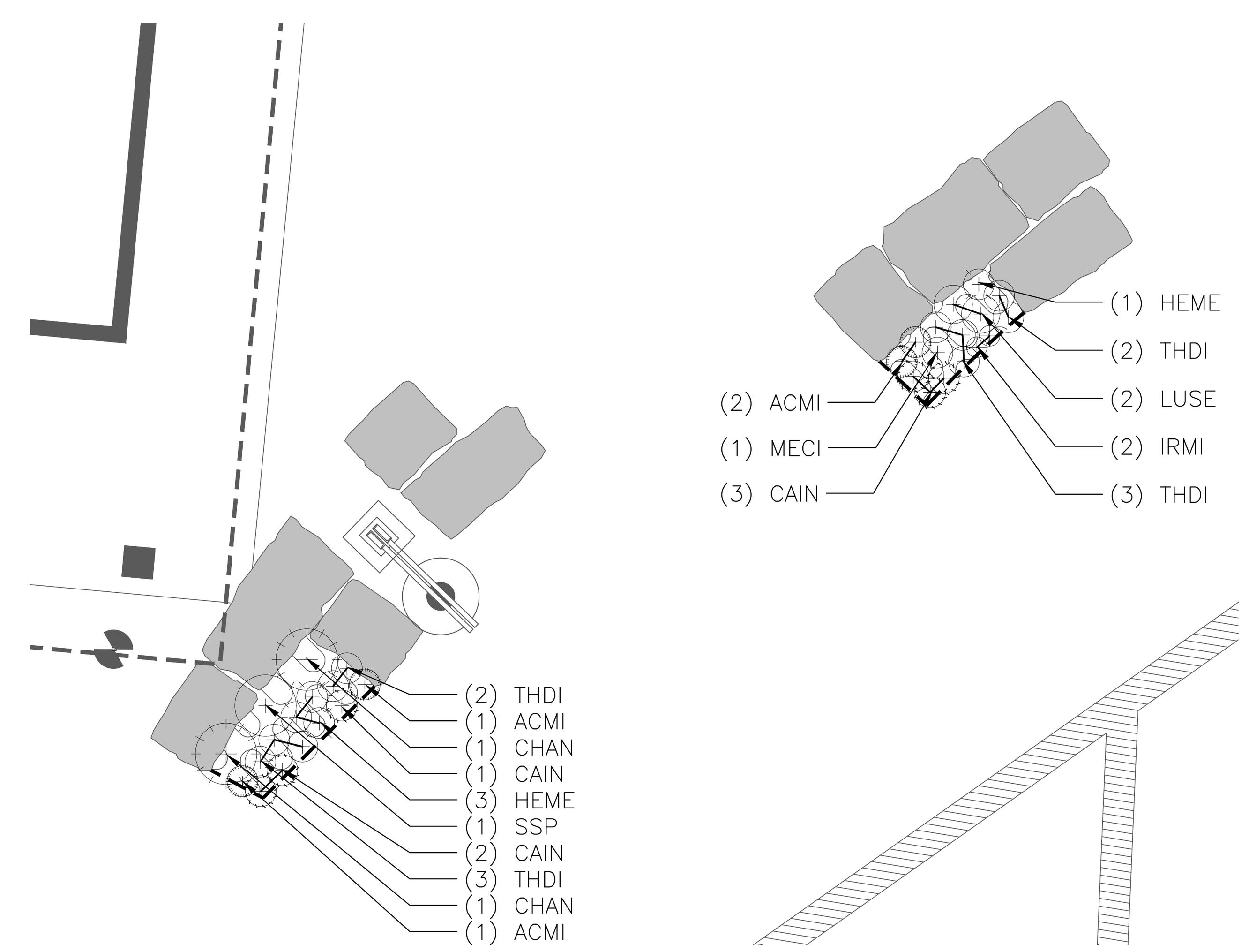

ENLARGEMENT E
1"=5'-0"

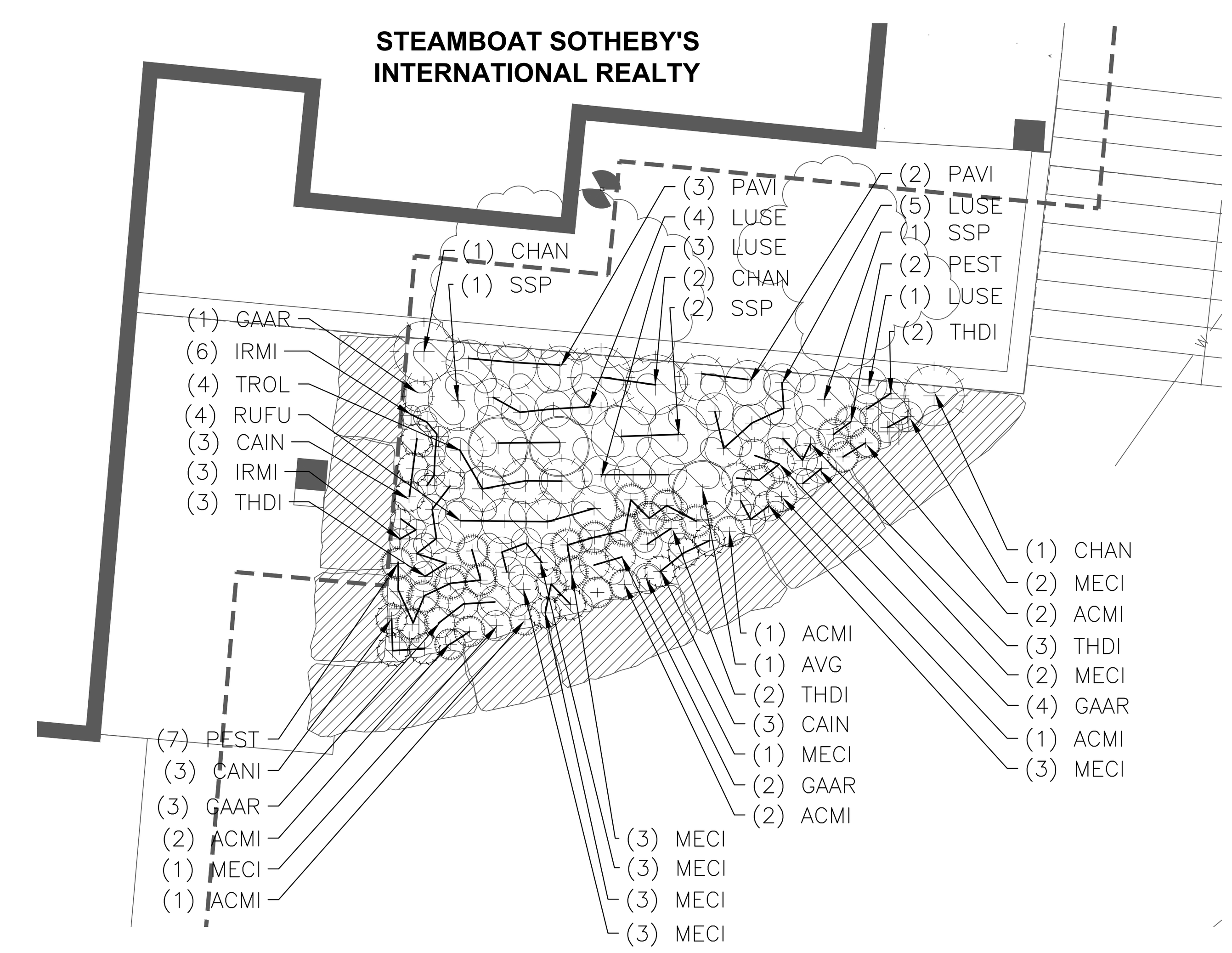

ENLARGEMENT F
1"=5'-0"

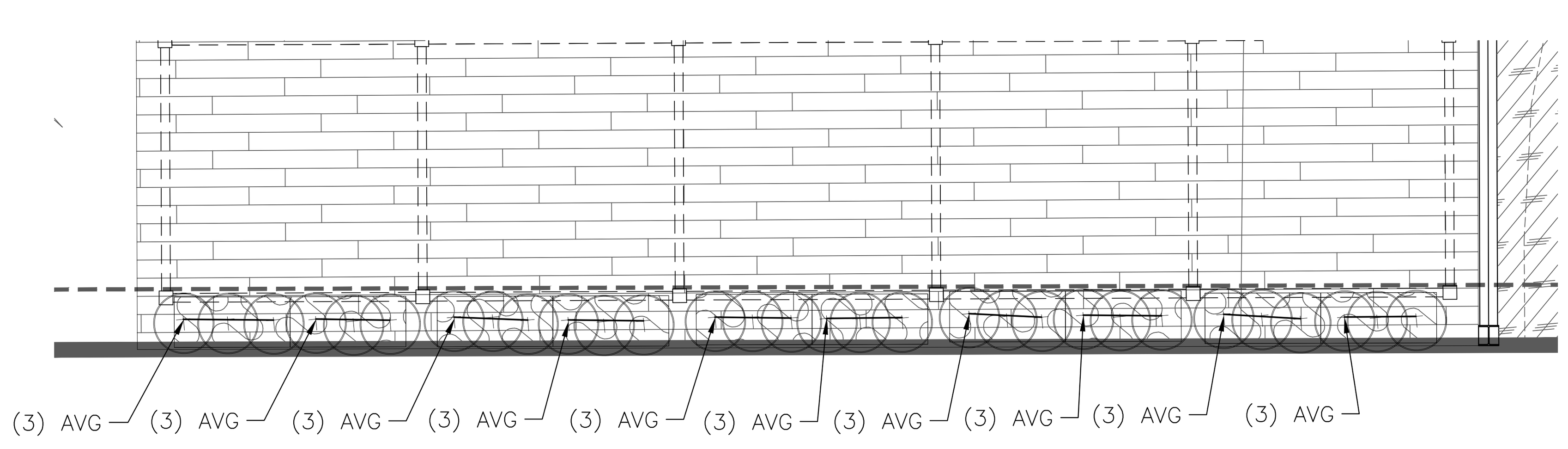

ENLARGEMENT G
1"=5'-0"

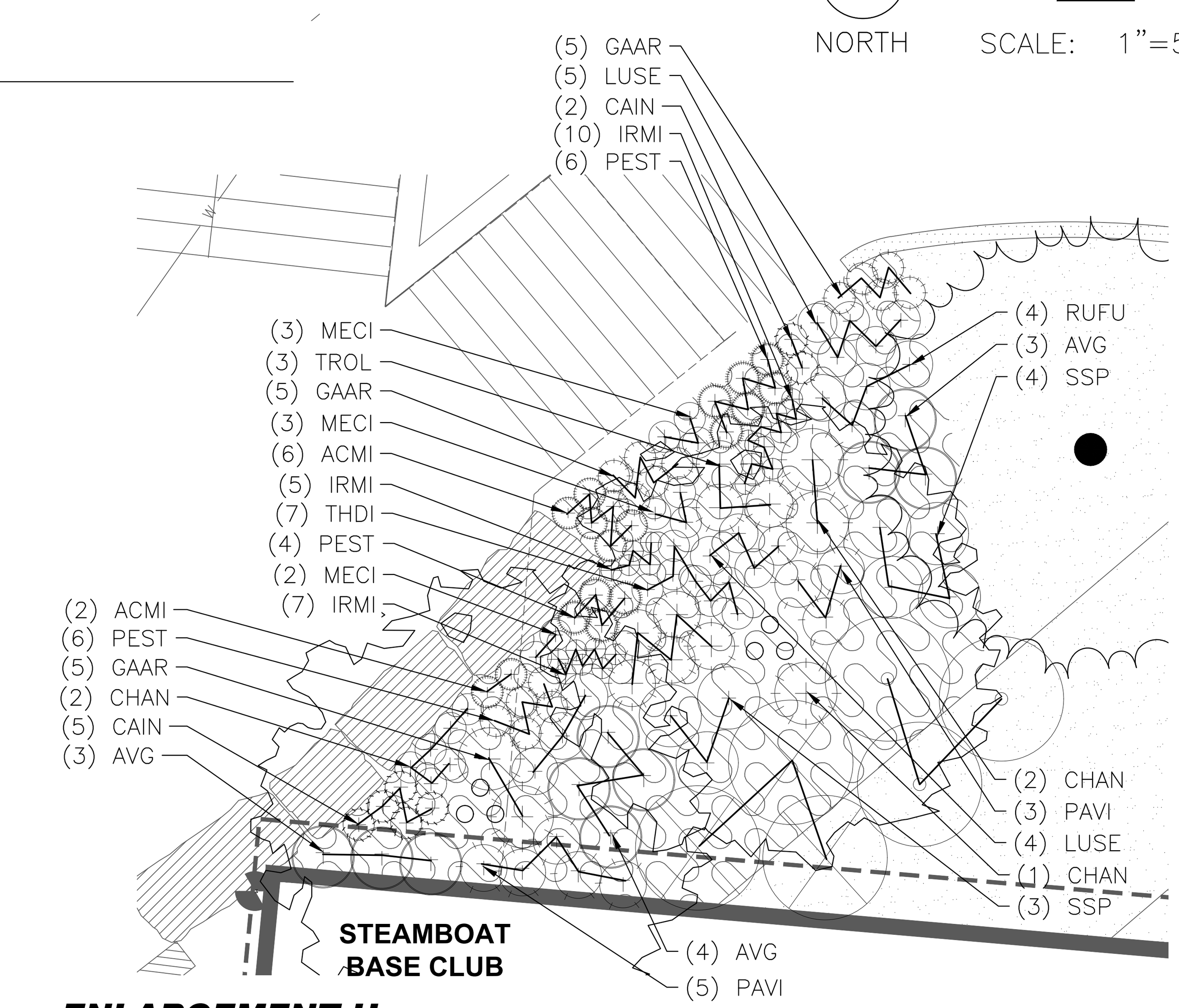

ENLARGEMENT H
1"=5'-0"

PLANTING LEGEND

- TURFGRASS SOD
- PLANTING AREA– BY OWNER
- LIMIT OF WORK
- LANDSCAPE REPAIR
- EXISTING TREES
- ORNAMENTAL GRASSES/ PERENNIAL
- DECIDUOUS TREE
- CONIFEROUS TREE
- SHRUB

PLANT SCHEDULE

ORNAMENTAL GRASSES

QTY.	ABV.	BOTANICAL NAME	COMMON NAME	SIZE	SPACING
47	AVG	HELICTOTRICHON SEMPERVIRENS	BLUE AVENA GRASS	#1	AS SHOWN
24	PAVI	PANICUM VIRGATUM 'PRAIRIE SKY'	PRAIRIE SKY SWTICHGRASS	#1	AS SHOWN
23	SSP	SCHIZACHYRIUM SCOPARIUM	LITTLE BLUESTEM	# 1	AS SHOWN.

PERENNIALS

QTY.	ABV.	BOTANICAL NAME	COMMON NAME	SIZE	SPACING
70	ACMI	ACHILLEA MILLEFOLIUM OCCIDENTALIS	WESTERN YARROW	# 1	AS SHOWN
65	CAIN	CASTILLEJA INTEGRA	INDIAN PAINTBRUSH	#1	AS SHOWN
22	CHAN	CHAMERION ANGUSTIFOLIUM	ALPINE FIREWEED	#1	AS SHOWN
47	GAAR	GAILLARDIA ARISTATA	BLANKETFLOWER	# 1	A SHOWN
41	HEME	HEMEROCALLIS HYBRIDS	DAYLILY	#1	AS SHOWN
72	IRMI	IRIS MISSOURIENSIS	ROCKY MOUNTAIN IRIS	# 1	AS SHOWN
49	LUSE	LUPINUS SERICEUS	SILKY LUPIN	# 1	AS SHOWN
43	MECI	MERTENSIA CILIATA	MOUNTAIN BLUEBELLS	#1	AS SHOWN
43	PEST	PENSTEMON STRICTUS	ROCKY MOUNTAIN PENSTEMON	#1	AS SHOWN
32	RUFU	RUDBECKIA FULGIDA 'GOLDSTURM'	BLACK EYED SUSAN	# 1	AS SHOWN
94	THDI	THERMOPSIS DIVARICARPA	GOLDEN BANNER	#1	AS SHOWN
33	TROL	TROLLIUS CHINENSIS 'GOLDEN QUEEN'	GLOBEFLOWER	#1	A SHOWN

PLANTING NOTES

1. THE CONTRACTOR SHALL SUPPLY ALL PLANTS IN QUANTITIES SUFFICIENT TO COMPLETE THE WORK SHOWN ON THE PLAN. SHOULD ANY DISCREPANCIES EXIST BETWEEN QUANTITIES SHOWN IN THE PLANT LIST AND THOSE SHOWN IN THE DRAWINGS, THE DRAWINGS SHALL TAKE PRECEDENCE.
2. ALL PLANT MATERIAL SHALL BE REVIEWED BY THE OWNER'S REPRESENTATIVE PRIOR TO INSTALLATION. CONTRACTOR SHALL INSURE PLANT MATERIAL MEET THE SPECIFICATIONS OF THE AMERICAN STANDARDS FOR NURSERY STOCK (LATEST EDITION) AS SET FORTH BY THE AMERICAN ASSOCIATION OF NURSERYMEN.
3. CONTRACTOR SHALL FURNISH PLANT MATERIALS FREE OF PESTS OR PLANT DISEASES. PRESELECTED OR "TAGGED" MATERIAL MUST BE INSPECTED BY THE CONTRACTOR AND CERTIFIED PEST AND DISEASE FREE. IT IS THE CONTRACTOR'S OBLIGATION TO WARRANTY ALL PLANT MATERIALS PER THE SPECIFICATIONS.
4. TREES HAVE HORIZONTAL LAYOUT RELATIONSHIP TO BUILDING FEATURES SUCH AS DOORS AND WINDOWS. CONTRACTOR SHALL REVIEW LAYOUT WITH OWNER'S REP. TO DETERMINE CONFLICTS OR INTERFERENCE PRIOR TO STAKING. CONTRACTOR SHALL STAKE PLANT LOCATIONS FOR THE REVIEW BY THE OWNER'S REPRESENTATIVE, PRIOR TO DIGGING PLANTING PITS. THE CONTRACTOR SHALL RELOCATE ANY PLANT AS DIRECTED BY THE OWNER'S REPRESENTATIVE PRIOR TO PLANTING AT NO ADDITIONAL COST TO THE OWNER.
5. ALL LANDSCAPE PLANTING AREAS SHALL BE COVERED WITH A MINIMUM OF 4 INCH DEPTH MULCH AS SPECIFIED. SUBMIT SAMPLE TO OWNER'S REPRESENTATIVE PRIOR TO INSTALLATION.
6. CONTRACTOR SHALL SOD AND MULCH ALL LANDSCAPE AREAS NOTED WITHIN THE CONSTRUCTION LIMITS. ANY LANDSCAPE AREAS BEYOND DISTURBED BY CONSTRUCTION OPERATIONS, NOT DIRECTED BY OWNER'S REPRESENTATIVE, SHALL BE REPAIRED OR REPLACED AT THE CONTRACTOR'S EXPENSE. THE CONTRACTOR SHALL CONFINE ALL OPERATIONS TO THE CONSTRUCTION LIMITS SHOWN. THE CONTRACTOR WILL STAKE THE SODDING LIMITS AND OBTAIN REVIEW FROM THE OWNER'S REPRESENTATIVE PRIOR TO SODDING.
7. CONTAMINATION OF IN PLACE PLANTING MIX/TOPSOIL DURING CONSTRUCTION WILL REQUIRE COMPLETE REPLACEMENT AT CONTRACTOR'S EXPENSE.
8. CONTRACTOR SHALL EVALUATE EXISTING PLANT MATERIAL DESIGNATED FOR REMOVAL WITH OWNER'S REPRESENTATIVE.

DESIGN TEAM ASSUMES NO RESPONSIBILITY FOR UTILITY LOCATIONS. THE UTILITIES SHOWN ON THIS DRAWING HAVE BEEN PLOTTED FROM THE BEST AVAILABLE INFORMATION. IT IS, HOWEVER, THE CONTRACTORS RESPONSIBILITY TO FIELD VERIFY THE SIZE, MATERIAL, HORIZONTAL AND VERTICAL LOCATION OF ALL UTILITIES PRIOR TO THE COMMENCEMENT OF ANY CONSTRUCTION.

SITE DETAIL KEYNOTES

PLANTING

TREE PLANTING	01/L3.8
ORNAMENTAL GRASS / PERENNIAL PLANTING	02/L3.8
INTENSIVE GARDEN ROOF ASSEMBLY	03/L3.8
LANDSCAPE PLANTER - ON STRUCTURE	04/L3.8
SHRUB PLANTING	05/L3.8

NORTH
0 2.5 5 10
SCALE: 1"=5'-0"

w e n k
ASSOCIATES
PLANNERS & LANDSCAPE ARCHITECTS
303.628.0003

JOSHUA J. CULWELL
985
10/25/2012
Original Date of Licensure
STATE OF COLORADO
LICENSED LANDSCAPE ARCHITECT

WATERPROOFING / RENOVATION - PHASE 2
TORIAN PLUM PARKING STRUCTURE
STEAMBOAT SPRINGS, CO

Date	10.22.18
Drawn By	BP
Reviewed by	JC
Job No.	16021.01

Revisions

Name	Date
BLDG DEPT #1	03/06/18

Issue: 100% Construction Documents
Sheet Title: Planting Enlargement Plans
Sheet Number
L4.1

RCRBD

RECORD SET

IRRIGATION CONSTRUCTION NOTES

1. DRAWINGS AND BASE INFORMATION - ALL BASE AND PLANTING INFORMATION HAVE BEEN PROVIDED BY WENK ASSOCIATES, INC. THE CONTRACTOR IS RESPONSIBLE TO NOTIFY HYDROSYSTEMS*KDI OF ANY DISCREPANCIES BETWEEN THE UTILITY OR PLANTING PLANS AND THE IRRIGATION PLAN. IF CONTRACTOR FAILS TO NOTIFY HYDROSYSTEMS*KDI AND MAKES CHANGES TO THE IRRIGATION SYSTEM DESIGN, HE ASSUMES ALL COSTS AND LIABILITIES ASSOCIATED WITH THOSE FIELD CHANGES. REFER TO SPECIFICATIONS FOR ADDITIONAL PROJECT REQUIREMENTS.

2. SYSTEM PRESSURE - HYDROSYSTEMS*KDI HAS CONTACTED THE LOCAL WATER DISTRICT THAT SERVES THIS SITE AND THEY HAVE BEEN TOLD THAT THE STATIC WATER PRESSURE IN THIS AREA SHOULD BE **90** PSI. THE CONTRACTOR IS RESPONSIBLE TO FIELD VERIFY PRESSURE PRIOR TO COMMENCING ANY CONSTRUCTION AND NOTIFY HYDROSYSTEMS*KDI OF ANY VARIANCE FROM THE STATED PRESSURE IMMEDIATELY. WRITTEN DOCUMENTATION OF PRESSURE TEST AND RESULTS SHALL BE PROVIDED TO HYDROSYSTEMS*KDI AT CONSTRUCTION ONSET. IF CONTRACTOR FAILS TO FIELD VERIFY PRESSURE AND/OR NOTIFY HYDROSYSTEMS*KDI OR ANY VARIATIONS FROM THIS PRESSURE, THEN HE ASSUMES ALL CONSTRUCTION AND ENGINEERING COSTS ASSOCIATED WITH SYSTEM MODIFICATIONS REQUIRED TO ACCOMMODATE ACTUAL SITE PRESSURE. THIS SYSTEM HAS BEEN DESIGNED FOR A REQUIRED STATIC PRESSURE OF **90** PSI MINIMUM.

3. IRRIGATION SYSTEM OPERATION INTENT - THIS IRRIGATION SYSTEM HAS BEEN DESIGNED TO IRRIGATE THE ESTABLISHED LANDSCAPE WITHIN A SIX NIGHT PER WEEK, SIX HOUR PER NIGHT WATERING WINDOW. ESTABLISHMENT WATERING WILL REQUIRE UP TO TWICE AS MUCH IRRIGATION FOR A FOUR TO SIX WEEK PERIOD. THE DESIGN IS BASED ON THE FOLLOWING PROJECTED WEEKLY APPLICATION RATES AFTER ESTABLISHMENT. THESE FIGURES ARE BASED ON A 30-YEAR AVERAGE WEATHER DATA AND WILL NEED TO BE ADJUSTED DUE TO SEASONAL CHANGES AND WEATHER CONDITIONS ABOVE AND BELOW THE AVERAGE VALUES UTILIZED.

   ORNAMENTAL PLANTINGS 1.08" PER WEEK PEAK SEASON

4. EQUIPMENT INSTALLATION - IT IS THE INTENT OF THIS DESIGN THAT ALL IRRIGATION EQUIPMENT BE INSTALLED WITHIN PROPERTY LIMITS AND WITHIN LANDSCAPED AREAS. ANY EQUIPMENT OTHER THAN VALVE BOXES OR SLEEVING THAT CONTAINS PIPE OR WIRES SHOWN OUTSIDE OF THESE LIMITS IS SHOWN IN THAT LOCATION FOR GRAPHICAL CLARITY ONLY. ALL VALVE BOXES SHALL BE INSTALLED A MINIMUM OF 2'-0" FROM EDGE OF ANY PAVED SURFACES UNLESS SPECIFICALLY INDICATED ON PLANS. BOXES INSTALLED IN OPEN TURF AREAS SHALL BE KEPT TO EDGES AND STAKED FOR REVIEW IF ALONG HIGH TRAFFIC AREAS. ALL VALVE BOXES SHALL BE PLACED A MINIMUM OF 3'-0" FROM THE CENTERLINE OF ANY DRAINAGE SWALE. ALL VALVE BOXES WITHIN PAVEMENT SHALL BE TIER 15 RATED BOXES FOR HEAVY DUTY NON-DELIBERATE TRAFFIC. BOX LID COLOR SHALL MATCH ADJACENT MATERIALS, I.E. GREEN IN TURF, TAN IN WOOD MULCH, GRAY IN STONE MULCH, PURPLE FOR RECLAIMED WATER SYSTEMS (IF REQUIRED). REFER TO LANDSCAPE PLANS FOR MATERIAL COLORS AND TYPES. ALL BOXES SHALL BE INSTALLED TO BE FLUSH WITH GRADE AND IN AN ORDERLY MANNER.

5. MANUAL DRAIN VALVES - CONTRACTOR TO INSTALL ONE MANUAL DRAIN VALVE ON PRESSURE SUPPLY LINE DIRECTLY DOWNSTREAM OF BACKFLOW PREVENTER AND AT ALL LOW POINTS AND DEAD ENDS OF PRESSURE SUPPLY PIPING TO INSURE COMPLETE DRAINAGE OF SYSTEM. CONTRACTOR SHALL BE RESPONSIBLE FOR DETERMINING THESE LOCATIONS IN-FIELD AND INSTALLATION LOCATIONS SHALL BE NOTED ON AS-BUILTS.

6. POP-UP SPRAY NOZZLES - CONTRACTOR TO INSTALL PLASTIC NOZZLES ON ALL POP-UP SPRAY HEADS. INSTALL 15 SERIES NOZZLES ON ALL HEADS SPACED AT 12' TO 14'. INSTALL 12 SERIES NOZZLES ON ALL HEADS SPACED 10' TO 11'. INSTALL 10 SERIES NOZZLES ON ALL HEADS SPACED AT 8' TO 9'. INSTALL 8 SERIES NOZZLES ON ALL HEADS SPACED AT 6' TO 7'. INSTALL 5' NOZZLES ON ALL HEADS SPACED AT 5'. INSTALL SIDE STRIP NOZZLES ON ALL HEADS WITH AN "S" DESIGNATION AND RIGHT AND LEFT CORNER STRIP NOZZLES ON ALL HEADS WITH AN "L" OR "R" DESIGNATION. VARIABLE ARC NOZZLES SHOULD BE UTILIZED ADJACENT TO CURVILINEAR SHRUB BEDS OR FOR ANY ANGLES THAT ARE NOT A STANDARD NOZZLE ANGLE.

7. UNLABELED PIPING - ALL UNLABELED LATERAL PIPING SHALL BE 1" MINIMUM UNLESS OTHERWISE NOTED.

8. SLEEVING - ALL SLEEVING UNDER PAVED SURFACES SHOWN ON PLANS IS BY CONTRACTOR UNLESS OTHERWISE NOTED. SLEEVING SHALL BE INSTALLED IN THE SIZES AND QUANTITIES SHOWN ON PLANS OR BASED ON THE SCHEDULE BELOW. WHERE SLEEVES ARE SHOWN, BUT NOT LABELED, FOLLOW THE SCHEDULE BELOW. ALL MAINLINE, CONTROL WIRES AND DRIP LINES UNDER PAVED SURFACES ARE TO BE INSTALLED IN SLEEVING. ALL MAINLINE SLEEVE LOCATIONS TO INCLUDE A SEPARATE WIRE SLEEVE.

SLEEVED PIPE SIZE/WIRE QUANTITY	REQUIRED SLEEVE SIZE & (QUANTITY)
¾" - 1¼" PIPING	2" PVC (1)
1½" - 2" PIPING	4" PVC (1)
1-25 CONTROL WIRES	2" PVC (1)
COMMUNICATION CABLE	2" PVC (1)

9. SPARE CONTROL WIRES - CONTRACTOR SHALL EXTEND THREE SPARE WIRES (ONE COMMON AND 2 CONTROL WIRES) FROM EACH CONTROLLER TO THE END OF THE MAINLINE SERVING THAT CONTROLLER OR AS SHOWN ON THE PLANS. INSTALL SPARE WIRES IN 10" ROUND VALVE BOX WITH QUICK COUPLING VALVE. REFER TO SPECIFICATIONS FOR WIRE COLOR. SEE IRRIGATION SCHEDULE FOR ADDITIONAL INFORMATION.

10. 2-WIRE SYSTEM NOTES - CONTRACTOR SHALL INSTALL ALL TWO-WIRE COMPONENTS PER MANUFACTURES RECOMMENDATIONS AND STANDARDS.
    - 10.1. CONTRACTOR SHALL USE ONLY MANUFACTURED 2-WIRE DECODER CABLE (SEE SCHEDULE FOR SPECIFIC 2-WIRE CABLE).
    - 10.2. ONLY USE SINGLE STATION DECODERS (SEE SCHEDULE FOR SPECIFIC MODEL).
    - 10.3. LOOP 5' OF 2-WIRE DECODER CABLE INTO ALL VALVE BOXES (WITH DECODERS AND SPLICES) FOR MAINTENANCE.
    - 10.4. USE ONLY 3M DBR-6 WATERPROOF CONNECTORS ON ALL WIRE SPLICES AND ALL WIRE SPLICES ARE TO BE MADE WITHIN A VALVE BOX WITH CONTROL VALVES OR A SEPARATE 10" ROUND VALVE BOX FOR WIRE SPLICES.
    - 10.5. INSTALL SURGE PROTECTOR RODS OR PLATES 8 LF. FROM VALVES, DECODERS, AND COMMUNICATION WIRE.
    - 10.6. GROUND ALL DECODERS AND DECODER WIRE A MINIMUM OF EVERY 1000' OF WIRE OR EVERY 12TH DECODER AND AT ALL ENDS OF 2-WIRE DECODER CABLE RUN.
    - 10.7. LOOP EXTRA 10' OF 2-WIRE DECODER CABLE INTO A VALVE BOX AT PHASING LINES FOR FUTURE CONNECTION (IF INDICATED ON PLANS).

11. ADJUSTMENT - CONTRACTOR SHALL FINE TUNE/ADJUST THE IRRIGATION SYSTEM TO REDUCE/AVOID OVERSPRAY ONTO HARD SURFACES BY ADJUSTING NOZZLE DIRECTION AND NOZZLE RADIUS.

12. PLANS AND SPECIFICATIONS - CONTRACTOR RESPONSIBLE TO ENSURE WORK CONFORMS TO PLANS AND SPECIFICATIONS. AT ONSET OF CONSTRUCTION, VERIFY PLANS ARE CURRENT. WHERE REQUIRED BY CITY, CONTRACTOR SHALL CONSTRUCT ONLY OFF CITY STAMPED PLANS. REVISIONS TO CITY STAMPED PLANS SHALL CONFORM TO CITY FIELD CHANGE PROCEDURES AND DOCUMENTATION.

13. EXISTING IRRIGATION DAMAGE - CONTRACTOR SHALL REPAIR OR REPLACE ANY EXISTING IRRIGATION SYSTEMS DAMAGED DURING NEW INSTALLATION. REPAIR OR REPLACEMENT SHALL BE DETERMINED BY OWNER OR OWNER'S REPRESENTATIVE AND PAID FOR BY THE LANDSCAPE CONTRACTOR.

14. EXISTING IRRIGATION COORDINATION - EXISTING IRRIGATION SYSTEM SHALL NOT BE TURNED OFF FOR MORE THAN 24 HOURS MAXIMUM. CONTRACTOR SHALL COORDINATE TURN OFF OF SYSTEM WITH OWNER OR MAINTENANCE STAFF 72 HOURS PRIOR TO ANY NEW CONSTRUCTION.

15. WATER BUDGETS AND PROJECTIONS - HYDROSYSTEMS-KDI HAS BASED THE IRRIGATION DESIGN AND THE ASSOCIATED PROJECTED WATER USE UPON SUCH FACTORS AS CITY OR WATER DISTRICT IMPOSED REQUIREMENTS, PUBLISHED PLANT SPECIES WATER NEEDS, SELECTED IRRIGATION METHOD EFFICIENCIES AS REPORTED BY INDEPENDENT TESTING FACILITIES, HISTORICAL WEATHER DATA FOR THE PROJECT LOCATION, AND PROPER MAINTENANCE PROCEDURES. HYDROSYSTEMS*KDI IS NOT RESPONSIBLE, AND ACCEPTS NO RESPONSIBILITY, FOR THE ACTUAL WATER USAGE VARIATION THAT IS A RESULT OF FIELD MODIFICATIONS TO THE SYSTEM NOT MATCHING CONSTRUCTION DOCUMENTS, IMPROPER MAINTENANCE, WASTE DUE TO SYSTEM DAMAGE OR VANDALISM, OR WEATHER CONDITIONS THAT DEVIATE FROM PUBLISHED 30 YEAR HISTORICAL AVERAGES.

IRRIGATION SCHEDULE

SYMBOL	MANUFACTURER	MODEL NO.	DESCRIPTION	DETAIL NO.
	RAIN BIRD	1812 SAM PRS WITH MPR SERIES NOZZLE	HI-POP SPRAY HEAD	1
L R S	RAIN BIRD	1812 SAM-PRS WITH SST, CORNER NOZZLE	HI-POP SPRAY HEAD	1
	RAIN BIRD	PEB	ELECTRIC CONTROL VALVE	2
	RAIN BIRD/HUNTER	PEB WITH ICD-100 DECODER	ELECTRIC CONTROL VALVE	3
	RAIN BIRD	44-LRC	QUICK COUPLING VALVE	4
N/S	MATCO	201X	MANUAL DRAIN VALVE	5
		LINE SIZE - 2½" AND SMALLER	GATE VALVE	6
		CLASS 200 BE - 2½" & SMALLER	PVC MAINLINE	7
		#100 NSF	POLY LATERAL	7
		CLASS 160	PVC SLEEVING	8
N/S	HUNTER	ICD-100	VALVE DECODER	9
	PAIGE	P7354D (FOR HUNTER, BASELINE)	2-WIRE DECODER CABLE	3, 9, 10
N/S	OLDCASTLE / CARSON	REFER TO SPECIFICATIONS AND DETAILS	VALVE BOXES	2, 3, 4, 5, 6, 9, 10
G A			GROUNDING LOCATION	10
B		TO BE REPLACE	NEW ELECTRIC CONTROLLER	11
A			EXISTING TWO-WIRE CONTROLLER	N / S
	RAIN BIRD	1402	BUBBLER	13 & 14
			BUILDING PENETRATION - DOWN	N / S
			EXISTING BACKFLOW PREVENTER	N / S
			EXISTING GATE VALVE	N / S
			EXISTING CONTROL VALVE	N / S
			EXISTING MAINLINE	N / S
			EXISTING SLEEVING	N / S
GPM			CONTROLLER & STATION NO. CONTROL VALVE SIZE	
3 A (controller)			NUMBER OF SPARE WIRES - 2 CONTROL AND 1 SPARE WIRES TO WHICH CONTROLLER - SEE CONSTRUCTION NOTES	

REFER TO SHEET

IR1.0 IRRIGATION NOTES

IR1.0 IRRIGATION SCHEDULE

IR1.1 IRRIGATION PLANS

IR1.1-IR1.2 IRRIGATION DETAILS

811

Know what's below.
Call before you dig.
CALL 3 BUSINESS DAYS IN ADVANCE BEFORE YOU DIG, GRADE, OR EXCAVATE FOR THE MARKING OF UNDERGROUND MEMBER UTILITIES.

wenk ASSOCIATES
PLANNERS & LANDSCAPE ARCHITECTS
303.628.0003

HydroSystems-KDI, Inc. Irrigation Consulting
860 Tabor Street, Suite 200
Lakewood, Colorado 80401
303-980-5327
303-980-5384 (fax)

KENNETH J. DiRAOLO Certified Irrigation Designer CID Irrigation Association 011093
03/06/18

WATERPROOFING / RENOVATION - PHASE 2

TORIAN PLUM PARKING STRUCTURE

STEAMBOAT SPRINGS, CO

Date 10.22.18
Drawn By BP
Reviewed by JC
Job No. 16021.01

Revisions

Name	Date
BLDG DEPT #1	03/06/18

Issue: 100% Construction Documents

Sheet Title: Irrigation Schedule & Notes

Sheet Number

IR1.0

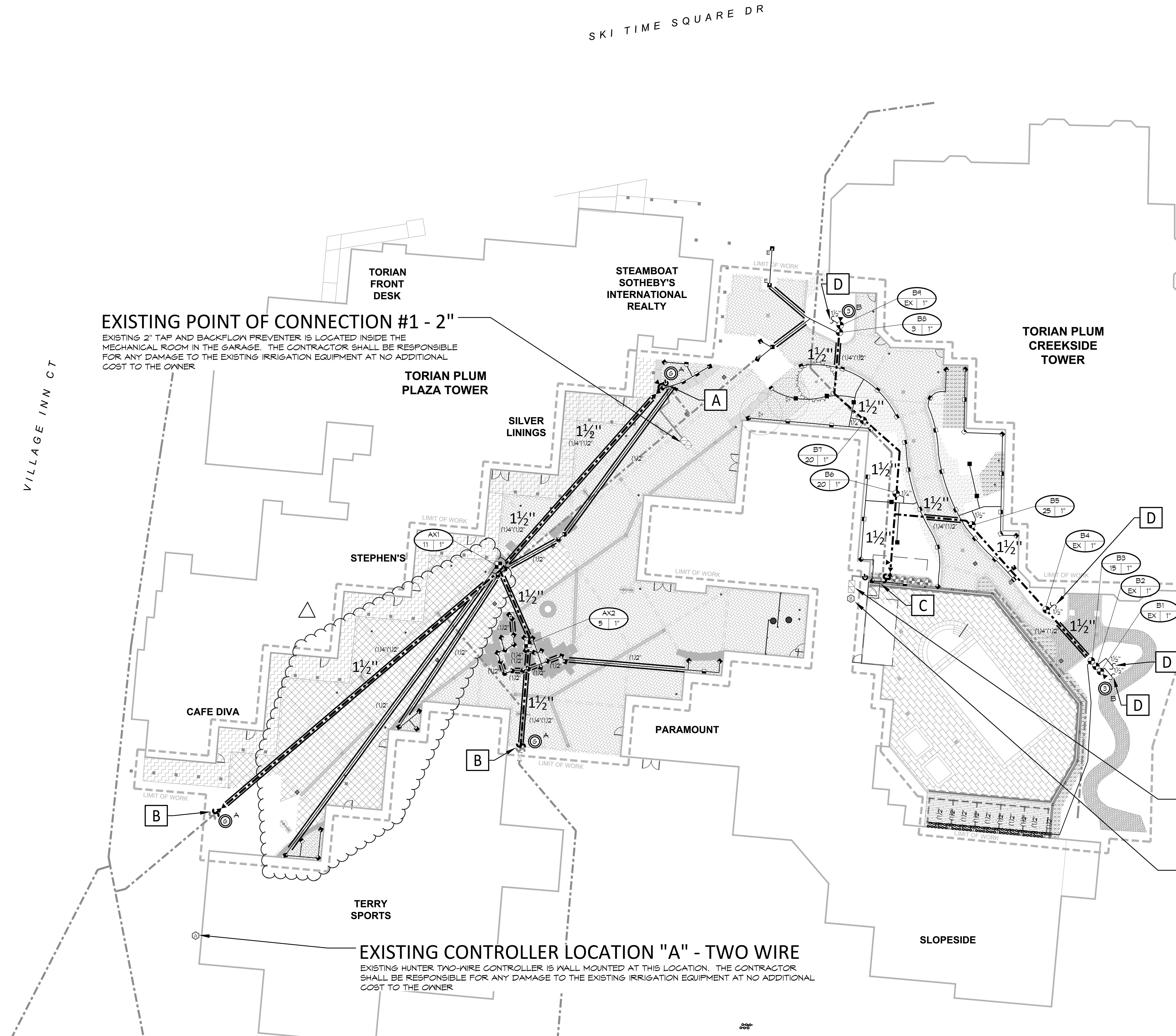

EXISTING POINT OF CONNECTION #1 - 2"

EXISTING 2" TAP AND BACKFLOW PREVENTER IS LOCATED INSIDE THE MECHANICAL ROOM IN THE GARAGE. THE CONTRACTOR SHALL BE RESPONSIBLE FOR ANY DAMAGE TO THE EXISTING IRRIGATION EQUIPMENT AT NO ADDITIONAL COST TO THE OWNER

EXISTING CONTROLLER LOCATION "A" - TWO WIRE

EXISTING HUNTER TWO-WIRE CONTROLLER IS WALL MOUNTED AT THIS LOCATION. THE CONTRACTOR SHALL BE RESPONSIBLE FOR ANY DAMAGE TO THE EXISTING IRRIGATION EQUIPMENT AT NO ADDITIONAL COST TO THE OWNER

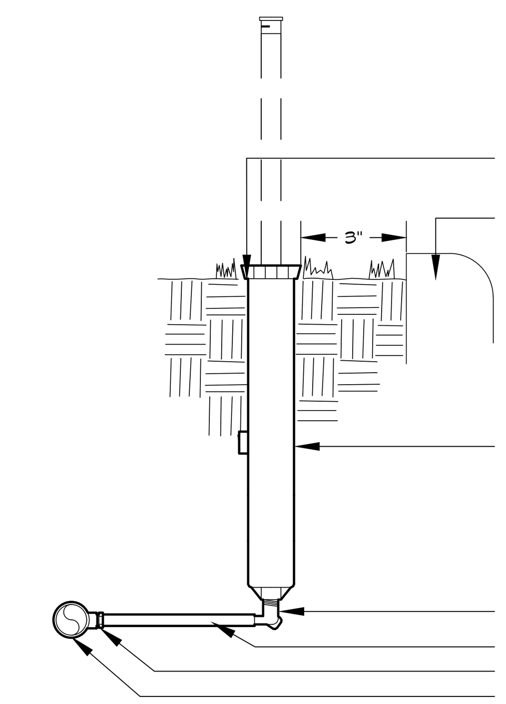

R C R B D

RECORD SET

NOTE:
- SET HEAD PERPENDICULAR TO FINISH GRADE SWING.
- FLEX PIPE SHALL BE ATTACHED TO BOTTOM SPRAY HEAD INLET ONLY.
- APPLY TEFLON TAPE TO ALL MALE PVC THREADED FITTINGS AND NIPPLES.

HI-POP SPRAY HEAD (1)

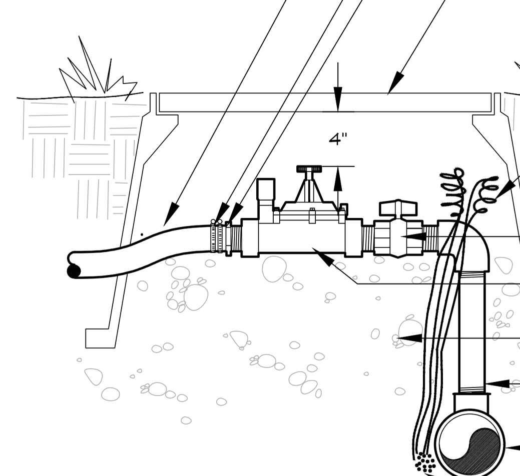

NOTE: DIAMETERS OF BALL VALVES, PVC FITTINGS AND NIPPLES SHALL EQUAL ELECTRIC CONTROL VALVE DIAMETER. VALVE BOXES SHALL BE INSTALLED PARALLEL OR PERPENDICULAR TO ADJACENT SIDEWALKS AND HARD SURFACES WHERE APPLICABLE. APPLY TEFLON TAPE TO ALL MALE THREADED FITTINGS AND THREADED NIPPLES.

ELECTRIC CONTROL VALVE (2)

24V - Poly Lateral

EXISTING POINT OF CONNECTION #2 - 1½"

EXISTING 1½" TAP AND BACKFLOW PREVENTER IS LOCATED INSIDE THE POOL MECHANICAL ROOM. THE CONTRACTOR SHALL BE RESPONSIBLE FOR ANY DAMAGE TO THE EXISTING IRRIGATION EQUIPMENT AT NO ADDITIONAL COST TO THE OWNER

EXISTING CONTROLLER LOCATION "B" - TO BE REPLACE

EXISTING RAIN BIRD CONTROLLER IS WALL MOUNTED AT THIS LOCATION INSIDE THE POOL MECHANICAL ROOM. CONTRACTOR SHALL REMOVE THE EXISTING CONTROLLER AND RETURN TO THE OWNER. INSTALL ONE NEW 15 STATION HUNTER PRO-C IN SAME LOCATION OF THE EXISTING CONTROLLER. THE CONTRACTOR SHALL BE RESPONSIBLE FOR ANY DAMAGE TO THE EXISTING IRRIGATION EQUIPMENT AT NO ADDITIONAL COST TO THE OWNER

A CONNECTION TO EXISTING COPPER PIPE FROM 2" TAP IN GARAGE
CONTRACTOR SHALL LOCATE THE EXISTING COPPER PIPE AT THIS APPROXIMATE LOCATION. CUT, TIE-ON, INSTALL ONE NEW LINE SIZE GATE VALVE, INSTALL ONE NEW QUICK COUPLER AND EXTEND NEW PVC MAINLINE AS SHOWN.

B CONNECTION TO EXISTING PVC MAINLINE AND TWO-WIRE CABLE
CONTRACTOR SHALL LOCATE THE EXISTING PVC MAINLINE & PVC BALL VALVE IN VALVE BOX, AT THIS APPROXIMATE LOCATION. CUT, TIE-ON AND EXTEND NEW PVC MAINLINE AS SHOWN. LOCATE THE EXISTING TWO-WIRE CABLE, CONNECT ONTO (WITH APPROVED WATER TITE CONNECTORS) AND EXTEND NEW TWO-WIRE ALONG THE NEW PVC MAINLINE AS SHOWN. INSTALL NEW VALVE BOX FOR THIS ASSEMBLY.

C CONNECTION TO EXISTING PVC MAINLINE AND CONVENTIONAL WIRES
CONTRACTOR SHALL LOCATE THE EXISTING PVC MAINLINE AT THIS APPROXIMATE LOCATION. CUT, TIE-ON AND EXTEND NEW PVC MAINLINE AS SHOWN. LOCATE THE EXISTING CONTROL WIRES, SPLICE INSIDE ONE 10" ROUND VALVE BOX AND EXTEND THE NECESSARY NUMBER OF NEW WIRES TO OPERATE THE EXISTING AND NEW CONTROL VALVES ALONG THE NEW PVC MAINLINE AS SHOWN.

D CONNECTION TO EXISTING LATERAL LINES FROM NEW CONTROL VALVES
CONTRACTOR SHALL LOCATE THE EXISTING POLY LATERAL AT THIS APPROXIMATE LOCATION. CUT, TIE-ON AND EXTEND NEW POLY LATERAL AS SHOWN. CONTRACTOR SHALL BE RESPONSIBLE TO HAVE ALL OF THE ZONES FOR BOTH IRRIGATION SYSTEMS OPERATIONAL WITH NO ADDITIONAL COST TO THE OWNER.

NORTH

0 10 20 40

SCALE: 1"=20'–0"

DESIGN TEAM ASSUMES NO RESPONSIBILITY FOR UTILITY LOCATIONS. THE UTILITIES SHOWN ON THIS DRAWING HAVE BEEN PLOTTED FROM THE BEST AVAILABLE INFORMATION. IT IS, HOWEVER, THE CONTRACTORS RESPONSIBILITY TO FIELD VERIFY THE SIZE, MATERIAL, HORIZONTAL AND VERTICAL LOCATION OF ALL UTILITIES PRIOR TO THE COMMENCEMENT OF ANY CONSTRUCTION.

811
Know what's below.
Call before you dig.
CALL 3 BUSINESS DAYS IN ADVANCE BEFORE YOU DIG, GRADE, OR EXCAVATE FOR THE MARKING OF UNDERGROUND MEMBER UTILITIES.

REFER TO SHEET

IR1.0	IRRIGATION NOTES
IR1.0	IRRIGATION SCHEDULE
IR1.1	IRRIGATION PLANS
IR1.1-IR1.2	IRRIGATION DETAILS

wenk
ASSOCIATES
PLANNERS &
LANDSCAPE
ARCHITECTS
303.628.0003

HydroSystems-KDI, Inc. Irrigation Consulting
860 Tabor Street, Suite 200
Lakewood, Colorado 80401
303-980-5327
303-980-5384 (fax)

KENNETH J. DIRADO
Certified Irrigation Designer
CID
IRRIGATION ASSOCIATION
011099
03/06/18

WATERPROOFING / RENOVATION - PHASE 2
TORIAN PLUM PARKING STRUCTURE
STEAMBOAT SPRINGS, CO

Date	10.22.18
Drawn By	BP
Reviewed by	JC
Job No.	16021.01

Revisions

Name	Date
BLDG DEPT #1	03/06/18

Issue:
100% Construction Documents

Sheet Title:
Irrigation Plan

Sheet Number
IR1.1

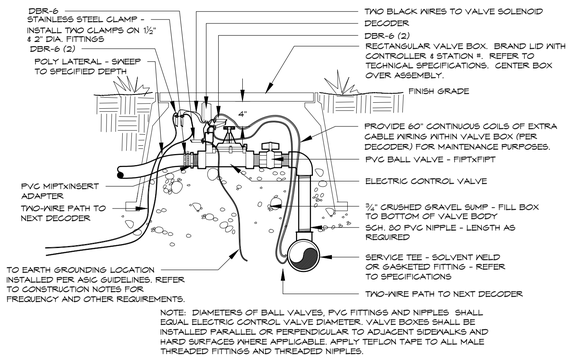

NOTE: DIAMETERS OF BALL VALVES, PVC FITTINGS AND NIPPLES SHALL EQUAL ELECTRIC CONTROL VALVE DIAMETER. VALVE BOXES SHALL BE INSTALLED PARALLEL OR PERPENDICULAR TO ADJACENT SIDEWALKS AND HARD SURFACES WHERE APPLICABLE. APPLY TEFLON TAPE TO ALL MALE THREADED FITTINGS AND THREADED NIPPLES.

ELECTRIC CONTROL VALVE (3)

TWO WIRE SYSTEM

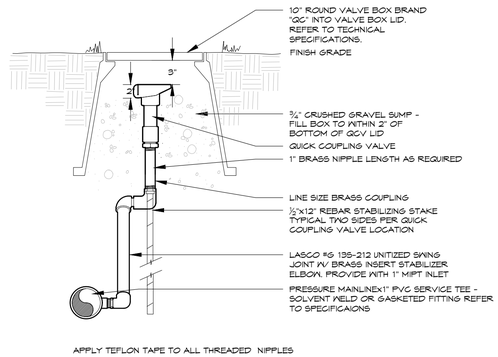

APPLY TEFLON TAPE TO ALL THREADED NIPPLES

QUICK COUPLING VALVE (4)

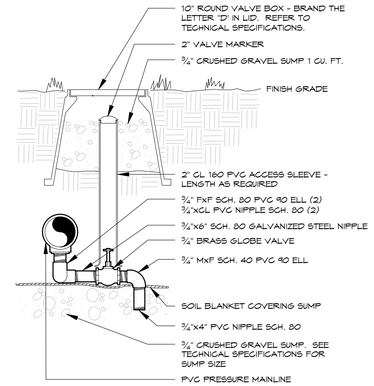

APPLY TEFLON TAPE TO ALL MALE THREADED PVC FITTINGS AND ALL NIPPLES

MANUAL DRAIN VALVE (5)

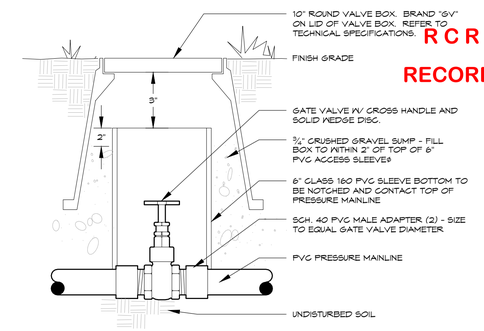

RCRBD

RECORD SET

GATE VALVE (6)

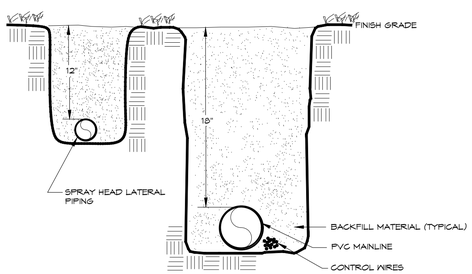

NOTE: REFER TO TECHNICAL SPECIFICATIONS FOR MINIMUM TRENCH WIDTHS.

TRENCHING (7)

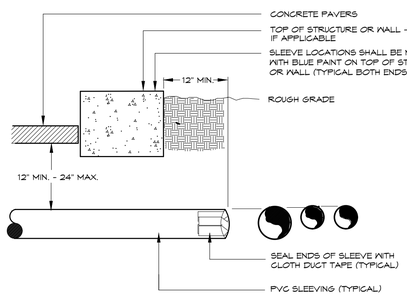

NOTE: ALL SLEEVING TO BE CLASS 160 BE PVC, SIZE AS NOTED.

INSTALL SLEEVES IN SIDE-BY-SIDE CONFIGURATION AT MULTIPLE SLEEVE LOCATIONS (DO NOT VERTICALLY STACK SLEEVING)

SLEEVING (8)

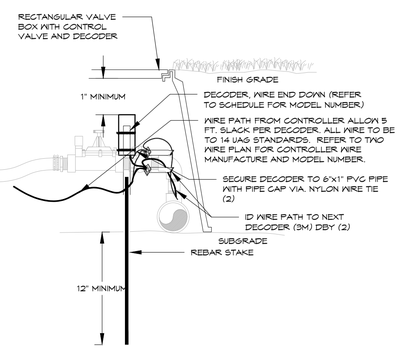

DECODER INSTALLATION (10)

TWO-WIRE SYSTEM

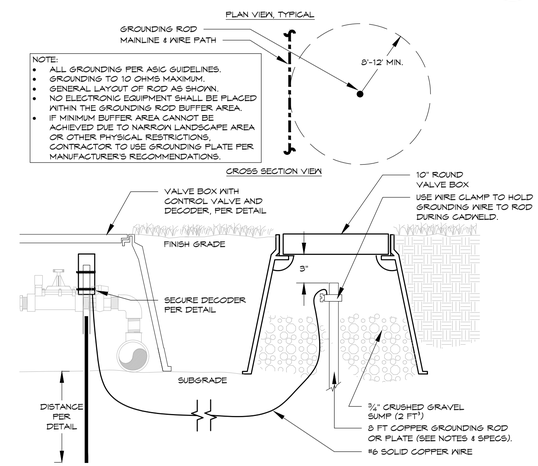

ACC GROUNDING (11)

TWO-WIRE SYSTEM - TYPICAL

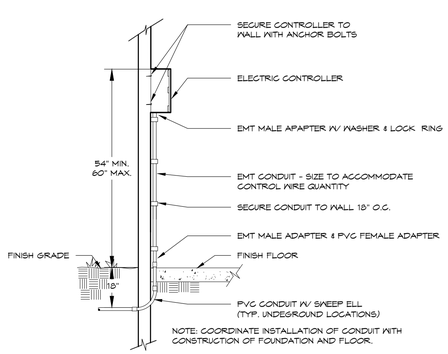

NOTE: COORDINATE INSTALLATION OF CONDUIT WITH CONSTRUCTION OF FOUNDATION AND FLOOR.

ELECTRIC CONTROLLER (12)

INTERIOR WALL MOUNT

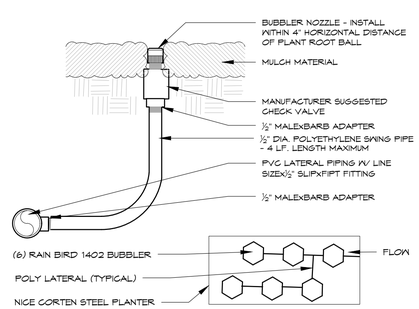

NOTE:
- SET BUBBLER(S) ON UPHILL SIDE OF ROOT BALL WHERE TREES PLANTED ON SLOPES EQUAL TO OR GREATER THAN 4 TO 1.
- APPLY TEFLON TAPE TO ALL MIPT FITTINGS

BUBBLER (13)

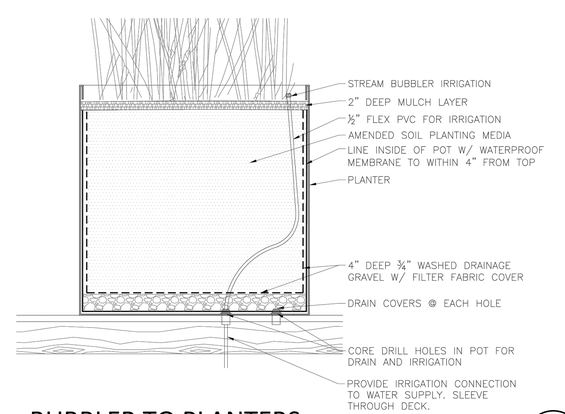

BUBBLER TO PLANTERS (14)

811

Know what's below.
Call before you dig.

CALL 3 BUSINESS DAYS IN ADVANCE BEFORE YOU DIG, GRADE, OR EXCAVATE FOR THE MARKING OF UNDERGROUND MEMBER UTILITIES.

REFER TO SHEET

IR1.0	IRRIGATION NOTES
IR1.0	IRRIGATION SCHEDULE
IR1.1	IRRIGATION PLANS
IR1.1-IR1.2	IRRIGATION DETAILS

wenk ASSOCIATES
PLANNERS & LANDSCAPE ARCHITECTS
303.628.0003

HydroSystems-KDI, Inc.
Irrigation Consulting
4643 Table Street, Suite 200
Denver, Colorado 80216
303-480-1200
303-480-1201 Fax

WATERPROOFING / RENOVATION - PHASE 2

TORIAN PLUM PARKING STRUCTURE

STEAMBOAT SPRINGS, CO

Date	10.22.18
Drawn By	BP
Reviewed by	JC
Job No.	16021.01

Revisions

Name	Date
1 BLDG DEPT #1	03/06/19

Issue:
100% Construction Documents

Sheet Title:
Irrigation Details

Sheet Number
IR1.2

GENERAL NOTES

SECTION 1 - GENERAL REQUIREMENTS

1.0 DEFINITIONS:

A. ENGINEER: REFERENCES ON THE STRUCTURAL DRAWINGS TO 'ENGINEER' MEAN THE STRUCTURAL ENGINEER OF RECORD. OTHER ENTITIES ARE SPECIFICALLY NOTED AS "CONTRACTOR'S ENGINEER", "MECHANICAL ENGINEER", ETC.

1.1.1 THESE NOTES SUPPLEMENT THE SPECIFICATIONS, WHICH SHALL BE REFERRED TO FOR ADDITIONAL REQUIREMENTS.

1.1.2 UNDERGROUND UTILITIES: LOCATE EXISTING UTILITIES, AND NOTIFY LANDSCAPE ARCHITECT OF EXISTING UTILITIES OR SUBGRADE CONDITIONS WHICH INTERFERE WITH WORK.

1.1.3 EXISTING STRUCTURES:

A. CONTRACT DOCUMENTS HAVE BEEN PREPARED USING AVAILABLE DRAWINGS AND SITE OBSERVATION AS PERMITTED BY ACCESS RESTRICTIONS DURING DESIGN.
B. DURING CONSTRUCTION, THE CONTRACTOR MAY ENCOUNTER EXISTING CONDITIONS WHICH ARE NOT NOW KNOWN OR ARE AT VARIANCE WITH PROJECT DOCUMENTATION (DISCOVERY). CONTRACTOR SHALL NOTIFY THE LANDSCAPE ARCHITECT OF ALL CONDITIONS NOT PER THE CONTRACT DOCUMENTS. EXAMPLES INCLUDE:
- SIZES OR DIMENSIONS OTHER THAN THOSE SHOWN.
- DAMAGE OR DETERIORATION TO MATERIALS AND COMPONENTS.
- CONDITIONS OF INSTABILITY OR LACK OF SUPPORT.
- ITEMS NOTED AS EXISTING ON THE DRAWINGS BUT NOT FOUND IN THE FIELD.

C. PREPARE DIMENSIONAL DRAWINGS OF ALL DISCOVERED ITEMS.
D. CONTRACTOR SHALL FIELD VERIFY ALL EXISTING STRUCTURAL CONDITIONS PRIOR TO SUBMITTING SHOP DRAWINGS.
E. CONTRACTOR SHALL MAKE ALLOWANCE FOR THE RESOLUTION OF SUCH DISCOVERIES IN THE CONSTRUCTION SCHEDULE.
F. SUBMIT A DIMENSIONED DRAWING OF ALL NEW OPENINGS THROUGH EXISTING STRUCTURE, AND SECURE APPROVAL PRIOR TO CUTTING. DRAWING SHALL SHOW SIZE OF PROPOSED OPENING AND IT'S VERTICAL AND HORIZONTAL LOCATION.

1.1.4 USE OF DRAWINGS:

A. DO NOT SCALE DRAWINGS.

B. WHERE DISCREPANCIES OCCUR BETWEEN PLANS, DETAILS, GENERAL NOTES AND SPECIFICATIONS, THE MORE STRINGENT REQUIREMENTS SHALL GOVERN. DETAILS ON DRAWINGS TAKE PRECEDENCE OVER GENERAL NOTES AND TYPICAL DETAILS. DETAILS NOTED TYPICAL APPLY TO ALL SIMILAR CONDITIONS. WHERE NO SPECIFIC DETAILS ARE SHOWN, CONSTRUCTION SHALL CONFORM TO SIMILAR WORK ELSEWHERE ON THE PROJECT.

1.1.5 TEMPORARY CONDITIONS:

THE STRUCTURE IS DESIGNED TO FUNCTION AS A UNIT UPON COMPLETION. THE CONTRACTOR IS RESPONSIBLE FOR FURNISHING ALL TEMPORARY BRACING AND/OR SUPPORT THAT MAY BE REQUIRED AS THE RESULT OF THE CONTRACTOR'S CONSTRUCTION METHODS AND/OR SEQUENCES.

CONTRACTOR'S CONSTRUCTION AND/OR ERECTION SEQUENCES SHALL RECOGNIZE AND CONSIDER THE EFFECTS OF THERMAL MOVEMENTS OF STRUCTURAL ELEMENTS DURING THE CONSTRUCTION PERIOD.

USE ONLY HAND OPERATED TOOLS FOR COMPACTION ADJACENT TO FOUNDATION WALLS.

1.1.6 SUBMITTALS AND SUBSTITUTIONS:

A. SUBMITTALS: REFER TO SPECIFICATIONS FOR DETAILED REQUIREMENTS.
1. IF THE CONTRACTOR REQUESTS A CHANGE FROM THE STRUCTURAL DRAWINGS, IT SHALL BE APPROVED BY THE LANDSCAPE ARCHITECT AND DESIGNED BY MARTIN/MARTIN, INC. PRIOR TO SUBMITTING SHOP DRAWINGS. VARIATION SHALL BE INDICATED ON THE SHOP DRAWINGS. CONTRACTOR SHALL COMPENSATE MARTIN/MARTIN, INC. FOR MAKING THE CHANGE.
2. CONSTRUCTION DOCUMENTS SHALL NOT BE REPRODUCED FOR USE IN SUBMITTALS.

B. SUBSTITUTIONS: LANDSCAPE ARCHITECTS APPROVAL SHALL BE SECURED FOR ALL SUBSTITUTIONS.
C. NONCONFORMANCE: NOTIFY LANDSCAPE ARCHITECT OF CONDITIONS NOT CONSTRUCTED PER THE CONTRACT DOCUMENTS PRIOR TO PROCEEDING WITH CORRECTIVE WORK. SUBMIT PROPOSED REPAIR TO THE LANDSCAPE ARCHITECT FOR ACCEPTANCE. CONTRACTOR SHALL COMPENSATE MARTIN/MARTIN, INC. FOR DESIGNING THE REPAIR.

1.1.7 OSHA STANDARDS:

THE STRUCTURE IS DESIGNED TO FUNCTION AS A UNIT UPON COMPLETION. NOTHING SHOWN ON THE STRUCTURAL DRAWINGS SHALL BE CONSTRUED AS ELIMINATING THE NEED FOR THE CONTRACTOR TO COMPLY WITH ALL OSHA REQUIREMENTS.

WHERE THE STRUCTURAL DRAWINGS APPEAR TO CONFLICT WITH OSHA REQUIREMENTS, THE STRUCTURAL DRAWINGS REPRESENT FINAL CONDITIONS ONLY; THE CONTRACTOR SHALL ADD ALL ERECTION FRAMING AS MAY BE NECESSARY TO COMPLY WITH OSHA.

1.1.8 COORDINATION:

A. STRUCTURAL DRAWINGS ARE NOT STAND-ALONE DOCUMENTS AND ARE INTENDED TO BE USED IN CONJUNCTION WITH CIVIL, LANDSCAPE ARCHITECTS, MECHANICAL, ELECTRICAL, AND DRAWINGS FROM OTHER DISCIPLINES. THE CONTRACTOR SHALL COORDINATE ALL REQUIREMENTS OF THE CONTRACT DOCUMENTS INTO SHOP DRAWINGS AND WORK.
B. COORDINATE DIMENSIONS OF ALL OPENINGS, BLOCKOUTS, DEPRESSIONS, ETC., WITH LANDSCAPE ARCHITECTS DRAWINGS, DRAWINGS FROM OTHER DISCIPLINES, PROJECT SHOP DRAWINGS, AND FIELD CONDITIONS PRIOR TO SHOP DRAWING SUBMITTAL.

1.1.9 SPECIAL INSPECTION:

SPECIAL INSPECTION SHALL BE PROVIDED PER IBC. THE LIST BELOW IS A SUMMARY OF REQUIRED TESTS, REFER TO THE SPECIFICATIONS FOR DETAILED TESTING REQUIREMENTS.

SOILS:
- SUBGRADE AND FILL BENEATH FOOTINGS AND SLABS-ON-GRADE AND WALL BACKFILL

CONCRETE:
- STRUCTURAL CONCRETE
- INSTALLATION OF EMBEDDED BOLTS AND PLATES SUPPORTING STRUCTURE
- REINFORCING STEEL PLACEMENT
- FIELD BENDING OF REINFORCING STEEL
- REINFORCING COUPLERS
- ANCHORED REBAR INTO HARDENED CONCRETE

STRUCTURAL STEEL:
- SHOP AND FIELD WELDING
- HIGH STRENGTH BOLTING

SECTION 2 - FOUNDATIONS
- MAXIMUM TOTAL LOAD BEARING PRESSURE 1500 PSF

SECTION 3 - STRUCTURAL CONCRETE

3.1.1 ALL WORK SHALL CONFORM WITH ACI 301-99 UNLESS NOTED OTHERWISE IN DRAWINGS OR PROJECT SPECIFICATIONS.

3.1.2 DETAIL BARS IN ACCORDANCE WITH THE LATEST EDITIONS OF "ACI DETAILING MANUAL", PUBLICATION SP-66 WITH ADDED REQUIREMENTS OF THE PROJECT SPECIFICATION, AND "BUILDING CODE REQUIREMENTS FOR REINFORCED CONCRETE", ACI 318.

3.2.1 REINFORCING:

A. REINFORCING: ASTM A615, GRADE 60 DEFORMED
B. WELDED AND FIELD BENT REINFORCING: ASTM A706, GRADE 60 DEFORMED
C. WELDED WIRE FABRIC: ASTM 185 PLAIN OR ASTM 497 DEFORMED, 70 KSI
D. SPLICES:
1. NO SPLICING OF REINFORCEMENT PERMITTED EXCEPT AS NOTED ON DRAWINGS. MAKE BARS CONTINUOUS AROUND CORNERS. WHERE PERMITTED, SPLICES MAY BE MADE BY CONTACT LAPS OR MECHANICAL CONNECTORS.
2. SPLICE CONTINUOUS TOP AND BOTTOM BARS IN WALLS, BEAMS, AND GRADE BEAMS AS FOLLOWS:
A. TOP BARS - AT MIDSPAN
B. BOTTOM BARS - OVER SUPPORT
3. LAP WELDED WIRE FABRIC A MINIMUM OF ONE MESH SPACING.
4. SPLICE LENGTHS
#3 = 22 in
#4 = 29 in
#5 = 36 in
#6 = 43 in
#7 = 63 in
#8 = 72 in

F. MISCELLANEOUS REINFORCING REQUIREMENTS
1. PROVIDE ADDITIONAL BARS OR STIRRUPS REQUIRED TO SECURE REINFORCING IN PLACE DURING CONCRETE PLACEMENT.
2. MAKE ALL REINFORCING BAR BENDS IN THE FABRICATOR'S SHOP UNLESS NOTED.
3. NO WELDING OF REINFORCING PERMITTED UNLESS NOTED ON DRAWINGS. WHERE PERMITTED, PERFORM WELDING IN ACCORDANCE WITH AWS D1.4, LATEST EDITION.
4. PROVIDE ADDED REINFORCING TO TRIM ALL OPENINGS, NOTCHES, AND REENTRANT CORNERS WITH (2) #5 BARS EACH SIDE OF ALL OPENINGS LARGER THAN 10" AND ALL REENTRANT CORNERS. EXTEND 2'-0 PAST EDGE OF OPENING.

3.2.2 STRUCTURAL CONCRETE MIX REQUIREMENTS:

A. RE:CONCRETE MIX TABLE IN REPAIR NOTES, S1.0

3.3.1 PLACING REINFORCEMENT:

A. REINFORCEMENT PROTECTION

1. CONCRETE PLACED AGAINST EARTH	3"
2. CONCRETE PLACED ON VOIDFORMS WITH MASONITE OR PLYWOOD COVERING	2"
3. CONCRETE PLACED IN FORMS BUT EXPOSED TO WEATHER OR EARTH:	2"
4. COLUMNS, GIRDERS, BEAMS	1 1/2"
5. WALLS NOT EXPOSED TO WEATHER OR EARTH	1"

B. REINFORCING PLACING TOLERANCES: PER ACI 117.
C. PROVIDE ACCESSORIES NECESSARY TO PROPERLY SUPPORT REINFORCING AND WELDED WIRE FABRIC AT POSITIONS SHOWN ON PLANS. ALL REINFORCING, DOWELS, BOLTS, AND EMBEDDED PLATES SHALL BE SET AND TIED IN PLACE BEFORE THE CONCRETE IS POURED. "STABBING" INTO PREVIOUSLY PLACED CONCRETE IS NOT PERMITTED.

3.3.2 MEP AND OTHER OPENINGS AND EMBEDMENTS:

A. PROVIDE SLEEVES FOR PLUMBING AND ELECTRICAL OPENINGS BEFORE PLACING CONCRETE. DO NOT CUT REINFORCING WHICH MAY CONFLICT.

3.4.1 NON-SHRINK GROUT: CONFORM TO ASTM C1107, GRADES B, OR C. ACHIEVE 6000 PSI COMPRESSIVE STRENGTH AT 28 DAYS.

SECTION 4 - MASONRY - NOT USED

SECTION 5 - METALS

5.1.1 CONNECTION DESIGN: PROVIDE CONNECTIONS AS SHOWN IN THE DETAILS. PROVIDE 3/4" DIAMETER A325 BOLTS AT ALL CONNECTIONS UNLESS OTHERWISE NOTED. REFER TO SPECIFICATION FOR ALTERNATIVES AND CONNECTIONS NOT SHOWN.

5.1.2 WELDING REQUIREMENTS:

A. WELDERS: HAVE IN POSSESSION CURRENT EVIDENCE OF PASSING THE APPROPRIATE A.W.S. QUALIFICATION TESTS.
B. MINIMUM WELDS: AISC SPECIFICATION, NOT LESS THAN 3/16" FILLET, CONTINUOUS UNLESS OTHERWISE NOTED.
1. WELD SIZES AND LENGTHS CALLED FOR ON THE DRAWINGS ARE THE NET EFFECTIVE REQUIRED. INCREASE WELD SIZE IF GAPS EXIST AT THE FAYING SURFACE.
2. WELD SIZES SHALL BE AS SHOWN UNLESS A GREATER SIZE IS REQUIRED BY AISC ASD-1989; J2.1.b AND J2.2.b.
C. ALL GROOVE WELDS SHALL BE COMPLETE PENETRATION UNLESS NOTED.

5.2.1 STRUCTURAL STEEL MATERIAL: PROVIDE THE FOLLOWING UNLESS NOTED:

A. WIDE FLANGE AND WT SHAPES:
ASTM A992 GRADE 50 — Fy = 50 KSI
B. HOLLOW STRUCTURAL SECTION (HSS):
1. ROUND ASTM A53 TYPE E OR S GRADE 'B' — Fy = 35 KSI
2. RECTANGULAR ASTM A500 GRADE 'B' — Fy = 46 KSI
C. S, M, HP SHAPES, ANGLES, CHANNELS, AND OTHER STEEL NOT IDENTIFIED: ASTM A36 — Fy = 36 KSI

D. PLATES AND BARS
ASTM A36 — Fy = 36 KSI
E. ANCHOR BOLTS
F1554 GR 55 WELDABLE, HEAVY HEX HEADED — Fy = 55 KSI Fu = 75 KSI

5.2.2 CONNECTION MATERIAL:

A. ANCHOR RODS: ASTM GRADE AS NOTED ON PLANS. PROVIDE HEAVY HEX HEADED RODS OR EQUIVALENT HEAVY HEX BEARING NUT TACK WELDED UNLESS NOTED OTHERWISE.
B. HIGH-STRENGTH BOLTS: ASTM A325 OR ASTM F1852 TENSION-CONTROL TYPE 1 HEAVY HEX, PLAIN UNLESS NOTED OTHERWISE. PROVIDE TENSION-CONTROL BOLTS WHEN EVER POSSIBLE.
C. WELDING ELECTRODES: AWS D1.1, E70 SERIES UNLESS NOTED OTHERWISE.
E. EXPANSION ANCHORS: WEDGE TYPE, REFER TO SPECIFICATIONS FOR MATERIAL, GRADE, AND FINISH. SUBMIT ICBO REPORT.
F. ADHESIVE ANCHORS: THREADED ROD ASTM A307, REFER TO SPECIFIATIONS FOR MATERIAL GRADE AND FINISH.
G. SLEEVE ANCHORS: SIMPSON SLEEVE ALL OR EQUIVALENT, SUBMIT ICBO REPORT.
H. SCREW ANCHOR: SIMPSON TITEN HD OR EQUIVALENT, SUBMIT ICBO REPORT.

5.3.1 STRUCTURAL STEEL INSTALLATION:

A. ALL HIGH STRENGTH BOLTS USED MAY BE INSTALLED SNUG TIGHT AS DEFINED BY AISC.

SECTION 6 - WOOD

6.1.1 FRAMING LUMBER:

A. DRY (19% MAXIMUM MOISTURE CONTENT AT THE TIME OF INSTALLATION), SELECT STRUCTURAL WESTERN CEDARS WITH MINIMUM DESIGN VALUES BASED ON THE 2012 NDS.
B. BEAMS AND STRINGERS USED WITH CANTILEVERS OR CONTINUOUS SPANS SHALL BE GRADED TO PROVIDE THE SPECIFIED ALLOWABLE STRESSES OVER THE ENTIRE MEMBER LENGTH.

6.2.1 NAILING:
A. UNLESS NOTED OTHERWISE ON THE DRAWINGS, PROVIDE BOX NAILS. MINIMUM NAILING SHALL BE IN ACCORDANCE WITH IBC 2015 TABLE 2304.10.1.

6.3.1 METAL CONNECTORS:

A. FRAMING CONNECTORS ARE THOSE MANUFACTURED BY SIMPSON STRONG-TIE COMPANY, SAN LEANDRO, CALIFORNIA. OTHER MANUFACTURER'S PRODUCTS MAY BE USED IF APPROVED BY THE ENGINEER. FURNISH NAILS AND/OR BOLTS OF DIAMETER, LENGTH, AND NUMBER SPECIFIED BY THE MANUFACTURER FOR EACH CONNECTOR.
B. ALL CONNECTOR HOLES SHALL BE FILLED WITH PROPER NAILS/BOLTS INCLUDING OPTIONAL NAIL LOCATIONS FOR UPLIFT. ALL BOLT HOLES SHALL BE DRILLED INTO FRAMING MEMBERS. MAXIMUM HOLE DIAMETER IS 1/16" LARGER THAN THE BOLT DIAMETER.

6.4.1 OPENINGS:

A. OPENING, POCKETS, ETC., SHALL NOT BE PLACED IN BEAMS, JOISTS, RAFTERS, STUDS, POSTS, COLUMNS, TIMBER AND OTHER STRUCTURAL MEMBERS UNLESS DETAILED ON THE STRUCTURAL DRAWINGS.

DESIGN CRITERIA

1. CODES AND STANDARDS USED IN DESIGN:
A. INTERNATIONAL BUILDING CODE 2015.

2. WIND LOADS PER IBC 2015

OCCUPANCY CATEGORY	II
WIND IMPORTANCE FACTOR, I	1.0
BASIC WIND SPEED (FASTEST-MILE WIND SPEED)	115 MPH
EXPOSURE CATEGORY	B

3. GRAVITY LOADS

A. GRAVITY LOADS TABLE

LOCATION	SUPER-IMPOSED DEAD LOAD, PSF	LIVE LOAD, PSF	LIVE LOAD REDUCTION	PARTITION LOAD, PSF	REMARKS
EXISTING ROOF OF GARAGE	250	100	NO	--	15,000# LIMIT FOR LOADED CONSTRUCTION OR MAINTENANCE EQUIPMENT
POOL DECK	--	100	NO	--	

4. SEISMIC - DOES NOT CONTROL

5. DRIFTING, SLIDING, AND UNBALANCED SNOW

GROUND SNOW LOAD	116 PSF
SNOW EXPOSURE FACTOR, Ce	1.0
SNOW LOAD IMPORTANCE FACTOR, Is	0.8
THERMAL FACTOR, Ct	1.2
FLAT ROOF SNOW LOAD, Pf	78 PSF

RCRBD
RECORD SET

weink ASSOCIATES
PLANNERS & LANDSCAPE ARCHITECTS
303.628.0003

MARTIN/MARTIN CONSULTING ENGINEERS
12499 WEST COLFAX AVENUE, LAKEWOOD, COLORADO 80215
MAIN 303.431.6300 MARTINMARTIN.COM

COLORADO REGISTERED PROFESSIONAL ENGINEER JOHN S. LUND 25052 4/18/18

WATERPROOFING / RENOVATION - PHASE 2
TORIAN PLUM PARKING STRUCTURE
STEAMBOAT SPRINGS, CO

Date	03.06.2018
Drawn By	AC/JW
Reviewed by	DW/KD
Job No.	17.0424

REVISIONS

ISSUE	DATE
BLDG DEPT #2	4/18/2018

Issue:
100% Construction Documents

Sheet Title:
NOTES

Sheet Number
S0.1

MM JOB #: 17.0424
PRINCIPAL: JOHN LUND
EOR: JOHN LUND
PROJECT MANAGER: DAVID WITTMAN
DESIGNERS: KEVIN DUNAM
DATE PRINTED: 4/18/2018 5:03:31 PM
FILE PATH: C:\Proj\17.0424 - Torian Plum Phase 2 - R17_sbogutyn.rvt

REPAIR NOTES

1) GENERAL:

1A) ALL WORK SHALL CONFORM WITH ACI 301, LATEST EDITION UNLESS NOTED OTHERWISE IN DRAWINGS OR PROJECT SPECIFICATIONS.

1B) DETAIL BARS IN ACCORDANCE WITH THE LATEST EDITIONS OF PUBLICATION SP-66: "ACI DETAILING MANUAL" WITH ADDED REQUIREMENTS OF THE PROJECT SPECIFICATION AND ACI 318: "BUILDING CODE REQUIREMENTS FOR STRUCTURAL CONCRETE."

1C) REINFORCING MATERIALS:
- SEE GENERAL NOTES

1D) STRUCTURAL CONCRETE MIX REQUIREMENTS:

CONCRETE MIX TABLE

CONC MIX TYPE	INTENDED USE	28 DAY STRENGTH f'c (KSI)	CONC WEIGHT	MAX W/C RATIO, INCLUDING FLY ASH	MAX AGGREGATE SIZE, IN (ASTM C33)	TOTAL AIR CONTENT (%), NOTE a	OTHER REQTS, NOTE b
1	ALL CONCRETE	5	NWC	0.40	3/4 #67	6	FRC

CONCRETE MIX TABLE NOTES:

PROPORTIONS OF MATERIALS IN CONCRETE MIX SHALL BE ESTABLISHED TO:

- PROVIDE THE MINIMUM COMPRESSIVE STRENGTH AS INDICATED IN THE MIX TABLE. DO NOT EXCEED THE MAXIMUM WATER-CEMENT RATIO NOTED.

- PROVIDE WORKABILITY AND CONSISTENCY TO PERMIT CONCRETE TO BE WORKED READILY INTO FORMS AND AROUND REINFORCEMENT UNDER CONDITIONS OF PLACEMENT TO BE EMPLOYED, WITHOUT SEGREGATION OR EXCESSIVE BLEEDING. CONTRACTOR SHALL SELECT APPROPRIATE SLUMP. USE ADMIXTURES AS REQUIRED TO OBTAIN DESIRED RESULTS.

USE TYPE I / II PORTLAND CEMENT UNLESS NOTED OTHERWISE. FOR CONCRETE MIXES USED ON FLOORS MINIMUM CEMENTITIOUS CONTENT SHALL BE 540 POUNDS PER CUBIC YARD

FOR CONCRETE PLACED BY PUMPING PROVIDE CONCRETE MIX FLOWABILITY TO FACILITATE PUMPING. ENTRAINED AIR MAY BE USED TO FACILITATE PUMPING SUBJECT TO THE PROVISIONS OF NOTE b BELOW.

a. WHERE AIR CONTENT IS INDICATED IN THE MIX TABLE, PROVIDE AIR ENTRAINING ADMIXTURE. TOTAL AIR CONTENT LIMITS INCLUDE BOTH ENTRAINED AND ENTRAPPED AIR +/- 1 1/2%.
b. ABBREVIATIONS FOR OTHER REQUIREMENTS AS FOLLOWS:
FRC = FIBER REINFORCED CONCRETE. 7.5 LB/YD

1E) NON-SHRINK REPAIR GROUT:
- CONFORM TO ASTM C1107, GRADES B OR C.
- ACHIEVE 8000 PSI COMPRESSIVE STRENGTH AT 28 DAYS.

1F) PLACING REINFORCEMENT:
- SEE GENERAL NOTES
- FIBER REINFORCEMENT NOVOMESH 950 AS MANUFACTURED BY PROPEX, CHATTANOOGA, OR APPROVED EQUAL.

1G) CONSTRUCTION JOINTS:
- SHEAR FRICTION JOINTS: ALL REPAIR SURFACES SHALL BE MECHANICALLY ROUGHENED TO A 1/4" AMPLITUDE AND THOROUGHLY CLEANED. EXPOSE THE COURSE AGGREGATE IN THE HARDENED CONCRETE AND REMOVE ALL LOOSE MATERIAL.

1) PREPARATION OF SPALL/DELAMINATION REPAIR AREAS

1A) LOCATE ALL EXISTING REINFORCING BARS, PRE-STRESSING TENDONS, CONDUIT, ETC. IN AREA TO BE REPLACED USING PACHOMETER OR OTHER MEANS ACCEPTABLE TO ENGINEER.

1B) VERIFY, USING 15 LB ELECTRIC CHIPPING HAMMER OR OTHER ACCEPTABLE MEANS, THAT DEPTH OF ALL EXISTING REINFORCING, CONDUIT, ETC. IS GREATER THAN 1/2 INCH BELOW EXISTING SURFACE OF CONCRETE.

1C) CHIP OUT ENTIRE REPAIR AREA TO A MINIMUM DEPTH OF 1/2 INCH. REPAIR AREA SHALL NOT BE LESS THAN 1/2" IN DEPTH. UNDERCUT BY 3/4 INCH MINIMUM ALL REINFORCING BARS WHICH HAVE MORE THAN 1/2 OF THEIR DIAMETER EXPOSED.

1D) SAW CUT PERIMETER FOR REPAIR AREA TO 1/2 INCH DEPTH (1/4 INCH AT OVERHEAD REPAIRS). REPAIR AREA TO BE RECTANGULAR OR SQUARE IN SHAPE. DO NOT CUT REINFORCING BARS, PRE-STRESSING TENDONS, CONDUIT, ETC. HAND CHIP AROUND SUCH ITEMS.

1E) PRIOR TO APPLICATION OF REPAIR MORTAR/CONCRETE, REMOVE ALL LOOSE DEBRIS AND PREPARE ENTIRE REPAIR AREA BY HIGH PRESSURE WATER BLAST, SCABBLER, OR OTHER APPROPRIATE MECHANICAL MEANS TO OBTAIN AN EXPOSED AGGREGATE SURFACE WITH A MINIMUM SURFACE PROFILE OF ± 1/4 INCH (ICRI DEGREE OF ROUGHNESS = CSP-9 MINIMUM).

2) STEEL REINFORCING AND MISCELLANEOUS STEEL

2A) CLEAN ALL EXPOSED REINFORCING, CONDUIT, ETC. TO REMOVE ALL TRACES OF RUST USING MEDIA BLASTING OR WIRE-WHEEL GRINDER.

2B) IF OVER 10% OF REINFORCING BAR'S CROSS-SECTIONAL AREA IS LOST AT ANY LOCATION, SPLICE IN NEW REINFORCING USING MECHANICAL CONNECTOR OR LAP SPLICE EACH SIDE OF DAMAGED AREA AS DIRECTED BY ENGINEER.

2C) COAT ALL EXPOSED STEEL CONDUIT, ETC. AND ADDED REINFORCING WITH A ZINC BASED PRIMER.

3) SATURATED SURFACE DRY (SSD)

3A) REFER TO THE SPECIFIC PRODUCT DATA SHEETS FOR THE SELECTED REPAIR MORTAR TO DETERMINE IF SURFACE SATURATED DRY (SSD) SURFACE IS REQUIRED.
3B) SATURATE SURFACE OF REPAIR AREA FOR 24 HOURS MINIMUM AND ALLOW SURFACE OF CONCRETE TO AIR-DRY, WITH NO STANDING WATER. SUBSTRATE SHALL BE SATURATED SURFACE DRY (SSD) DURING APPLICATION OF REPAIR MORTAR.

4) ACCEPTABLE REPAIR PRODUCTS

4A) HORIZONTAL APPLICATIONS:
- MASTEREMACO T 1060 C BY BASF
- SIKAQUICK 2500 BY SIKA

4B) VERTICAL AND OVERHEAD APPLICATIONS WHERE FORMS ARE REQUIRED:
- MASTEREMACO S 466 CI BY BASF
- SIKACRETE 211 SCC PLUS BY SIKA

4C) VERTICAL AND OVERHEAD APPLICATIONS WHERE FORMS ARE NOT REQUIRED:
- MASTEREMACO S 488 CI BY BASF
- SIKAREPAIR 224 BY SIKA
- SIKAQUICK VOH BY SIKA

4D) FULL DEPTH APPLICATIONS:
- MASTEREMACO S 440 CI BY BASF
- SIKACRETE 211 PLUS BY SIKA (8" MAX DEPTH)

4E) STEEL PRIMERS:
- MASTERPROTECT P 8100 AP BY BASF
- ARMATEC 110 BY SIKA

4F) EPOXY LEVELING COMPOUND
- MASTERSEAL 350 BY BASF
- SIKADUR 22 LO-MOD BY SIKA

5) SUBSTITUTIONS:

5A) ALL SUBSTITUTIONS MUST BE APPROVED BY THE ENGINEER PRIOR TO USE. ALTERNATE PRODUCTS MUST MEET OR EXCEED THE PERFORMANCE CRITERIA OF THE SPECIFIED PRODUCTS.

6) PERFORMANCE CRITERIA

6A) REFER TO THE MANUFACTURER'S PRODUCT DATA SHEETS FOR SPECIFIED PRODUCTS.

6B) COLOR TO BE PRODUCT STANDARD UNLESS DIRECTED OTHERWISE BY ENGINEER.

7) MATERIALS

7A) REPAIR MORTAR:
- DELIVER MATERIAL TO JOB SITE IN SEALED, UNDAMAGED CONTAINERS. IDENTIFY EACH CONTAINER WITH MATERIAL NAME, DATE OF MANUFACTURE, AND LOT NUMBER.
- STORE MATERIALS INDOORS OR COVERED AT TEMPERATURES NOT EXCEEDING 75 DEGREES F, OR AS RECOMMENDED BY MANUFACTURER.
- THE MATERIAL SHALL NOT CONTAIN ASBESTOS, CHLORIDES, NITRATES, ADDED GYPSUM, ADDED LIME, OR HIGH ALUMINUM CEMENTS.
- THE MATERIAL SHALL BE NON-COMBUSTIBLE.
- THE REPAIR MORTAR SHALL BE SUPPLIED IN A FACTORY PROPORTIONED UNIT.
- THE REPAIR MORTAR MUST BE PLACABLE FROM 1/2 INCH TO 4 INCHES IN DEPTH AND EXTENDABLE IN GREATER DEPTHS.
- AGGREGATE TO EXTEND THE REPAIR MORTAR SHALL BE A 3/8 INCH CLEAN, WELL-GRADED, SATURATED SURFACE DRY MATERIAL, HAVING LOW ABSORPTION AND HIGH DENSITY. AGGREGATE SHALL CONFORM TO ASTM C-33/ MATCH AGGREGATE WITH EXISTING CONCRETE.

8) MIXING

8A) MIXING THE CONCRETE REPAIR MORTAR SHALL BE IN ACCORDANCE WITH THE MANUFACTURER'S WRITTEN INSTRUCTIONS.

9) APPLICATION

9A) PLACEMENT PROCEDURE:
- PLACE MATERIALS IN ACCORDANCE WITH MANUFACTURER'S SPECIFICATIONS.

9B) MOIST CURE SURFACE IN ACCORDANCE WITH MANUFACTURER'S RECOMMENDATIONS.

9C) ADHERE TO ALL LIMITATIONS AND CAUTIONS FOR THE REPAIR MORTAR IN THE MANUFACTURER'S CURRENT PRINTED LITERATURE.

10) CLEANING

10A) LEAVE FINISHED WORK AND WORK AREA IN A NEAT, CLEAN CONDITION WITHOUT EVIDENCE OF SPILLOVERS ONTO ADJACENT AREAS.

RCRBD
Record Set

w e n k
ASSOCIATES
PLANNERS & LANDSCAPE ARCHITECTS
303.628.0003

MARTIN/MARTIN CONSULTING ENGINEERS
12499 WEST COLFAX AVENUE, LAKEWOOD, COLORADO 80215
MAIN 303.431.6300 MARTINMARTIN.COM

37194
3/6/2018
PROFESSIONAL ENGINEER

WATERPROOFING / RENOVATION - PHASE 2
TORIAN PLUM PARKING STRUCTURE
STEAMBOAT SPRINGS, CO

Date 03.06.2018
Drawn By AC/JW
Reviewed by DW/KD
Job No. 17.0424

REVISIONS

ISSUE	DATE

Issue:
100% Construction Documents

Sheet Title:
REPAIR NOTES

Sheet Number
S1.0

MM JOB #: 17.0424
PRINCIPAL: JOHN LUND
EOR: JOHN LUND
PROJECT MANAGER: DAVID WITTMAN

DESIGNERS: KEVIN DUNAM
DATE PRINTED: 3/5/2018 6:59:12 PM
FILE PATH: C:\Proj\17.0424 - Torian Plum Phase 2 - R17_acontreras@martinmartin.com.rvt

WORK LIST

WORK ITEM	DESCRIPTION	REFERENCE	QUANTITY
A	INJECT LEAKS AT INVERTED TEE BEAMS.	5/S2.0	60 LF
B	REPAIR & SEAL PIPE PENETRATIONS W/ INJECTABLE URETHANE GROUT		13 EA
C	INJECT LEAKING WALL CRACKS WITH HYDROPHOBIC GROUT.	6/S2.0	60 LF
D	INJECT LEAKS AT DOUBLE TEE FLANGES.	3/S2.0	70 LF
E	CLEAN WALLS OF ALL ACTIVATED URETHANE GROUT		LS
F	UNIT PRICING FOR REMOVAL OF EFFLORESCENCE & STAINING ON WALLS & OVERHEAD PRECAST STRUCTURE		
H	REPAIR DAMAGED CONCRETE PER DETAIL.	2/S2.0	40 SF

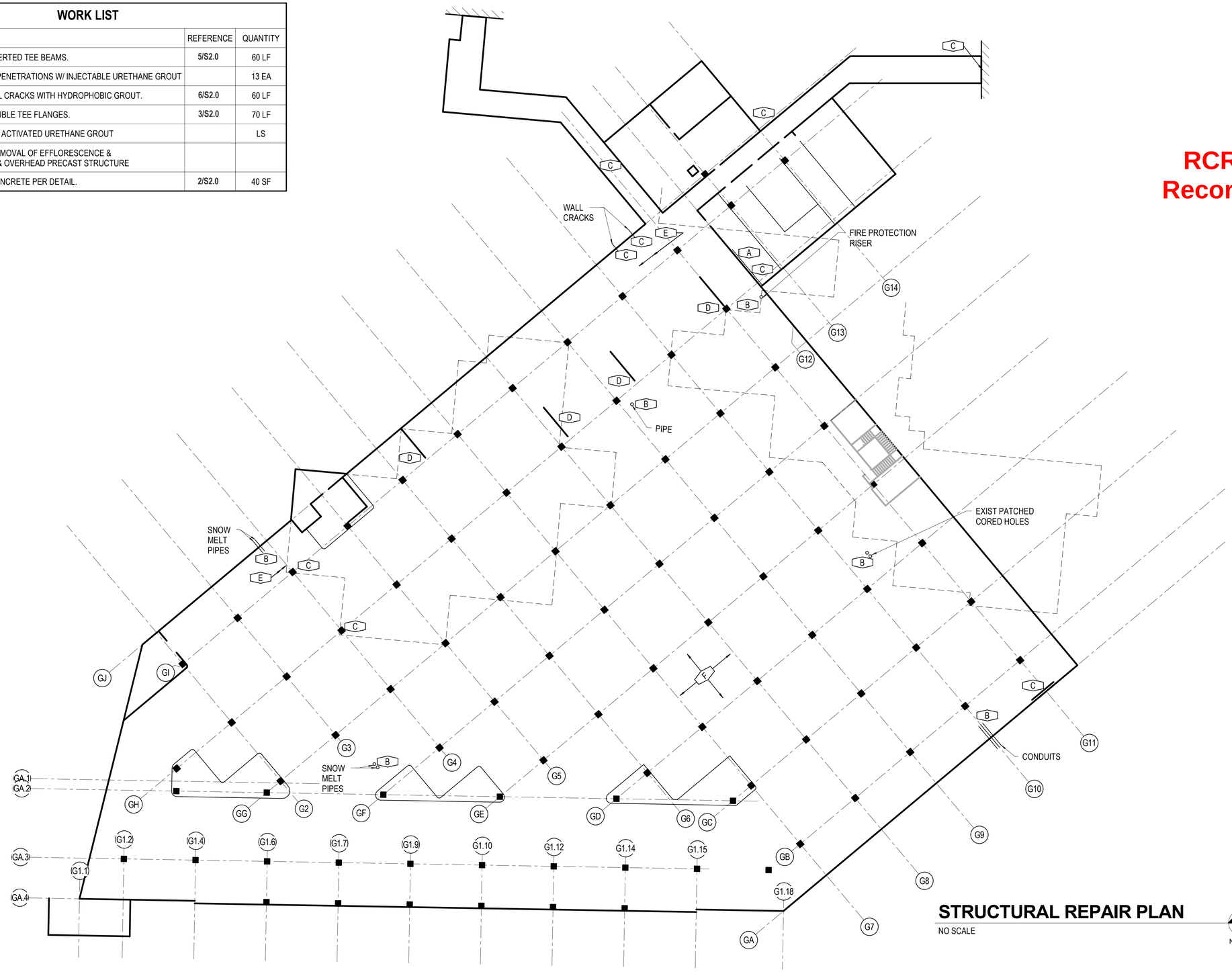

STRUCTURAL REPAIR PLAN

NO SCALE

NORTH

RCRBD Record Set

weink ASSOCIATES
PLANNERS & LANDSCAPE ARCHITECTS
303.628.0003

MARTIN/MARTIN CONSULTING ENGINEERS
12499 WEST COLFAX AVENUE, LAKEWOOD, COLORADO 80215
MAIN 303.431.6300 MARTINMARTIN.COM

37194
3/6/2018
PROFESSIONAL ENGINEER

WATERPROOFING / RENOVATION - PHASE 2
TORIAN PLUM PARKING STRUCTURE
STEAMBOAT SPRINGS, CO

Date 03.06.2018
Drawn By AC/JW
Reviewed by DW/KD
Job No. 17.0424

REVISIONS

ISSUE	DATE

Issue:
100% Construction Documents

Sheet Title:
REPAIR PLAN

Sheet Number
S1.1

MM JOB #: 17.0424
PRINCIPAL: JOHN LUND
EOR: JOHN LUND
PROJECT MANAGER: DAVID WITTMAN

DESIGNERS: KEVIN DUNAM
DATE PRINTED: 3/5/2018 6:59:12 PM
FILE PATH: C:\Proj\17.0424 - Torian Plum Phase 2 - R17_acontreras@martinmartin.com.rvt

WORK ITEM LIST

WORK ITEM	DESCRIPTION	REF	ESTIMATED QUANTITY
1	REMOVE ALL (E) WATERPROOFING AND REPAIR ANY CRACKS AND AREAS OF SPALL OR DELAMINATION. REPAIR DRAIN LINES W/ (N) JOINT GASKETS. PROVIDE (N) HOT-APPLIED WATERPROOFING SYSTEM W/ DRAINAGE MAT PER SPECIFICATIONS. INSTALL (N) AGGREGATE OR PERVIOUS FLOW-FILL.	1/S2.2 2/S2.2 3/S2.2 6/S2.2	**6,000 SF**
2	EXTEND (N) WATERPROOFING SYSTEM 4'-0" BELOW (E) PARKING GARAGE ROOF SYSTEM CONNECTION. EXCAVATE & BACKFILL AS REQD.	4/S2.2	**265 LF / 1,325 SF**
3	REMOVE (E) PLANTER. PROVIDE EXTERIOR WALL CLADDING AND FINISH TO MATCH EXISTING WHERE PREVIOUSLY COVERED.	1/S2.1	**2 LOC**
4	LAP (N) WATERPROOFING SYSTEM TO (E) WATERPROOFING PER DETAIL.	9/S2.2	**100 LF**
5	PROVIDE ISOLATION BOARD AND COVE JOINT SEALANT BETWEEN NEW PAVING AND EXISTING SIDEWALK OR WALL.	5/S2.2	**110 LF**
6	INJECT CRACKS IN CONC FOUNDATION WALL PER DETAILS.	6/S2.0 4/S2.0	**250 LF**
7	PROVIDE FULL-DEPTH CURTAINWALL URETHANE INJECTION WHERE ACCESS FROM OPPOSITE SIDE OF CONC FOUNDATION WALL IS PROHIBITED.		**2,200 SF (WALL AREA)**
8	CLEAN CONC FOUNDATION WALLS OF ALL RECENTLY ACTIVED URETHANE GROUT COMING THROUGH EXISTING CRACKS.		**TBD (SF)**
9	PROVIDE LINE ITEM PRICING FOR CLEANING AND REMOVAL OF EFFLORESCENCE AND CORROSION STAINING THROUGHOUT GARAGE LEVEL WALLS AND OVERHEAD PRECAST CONCRETE STRUCTURE.		**TBD (SF)**

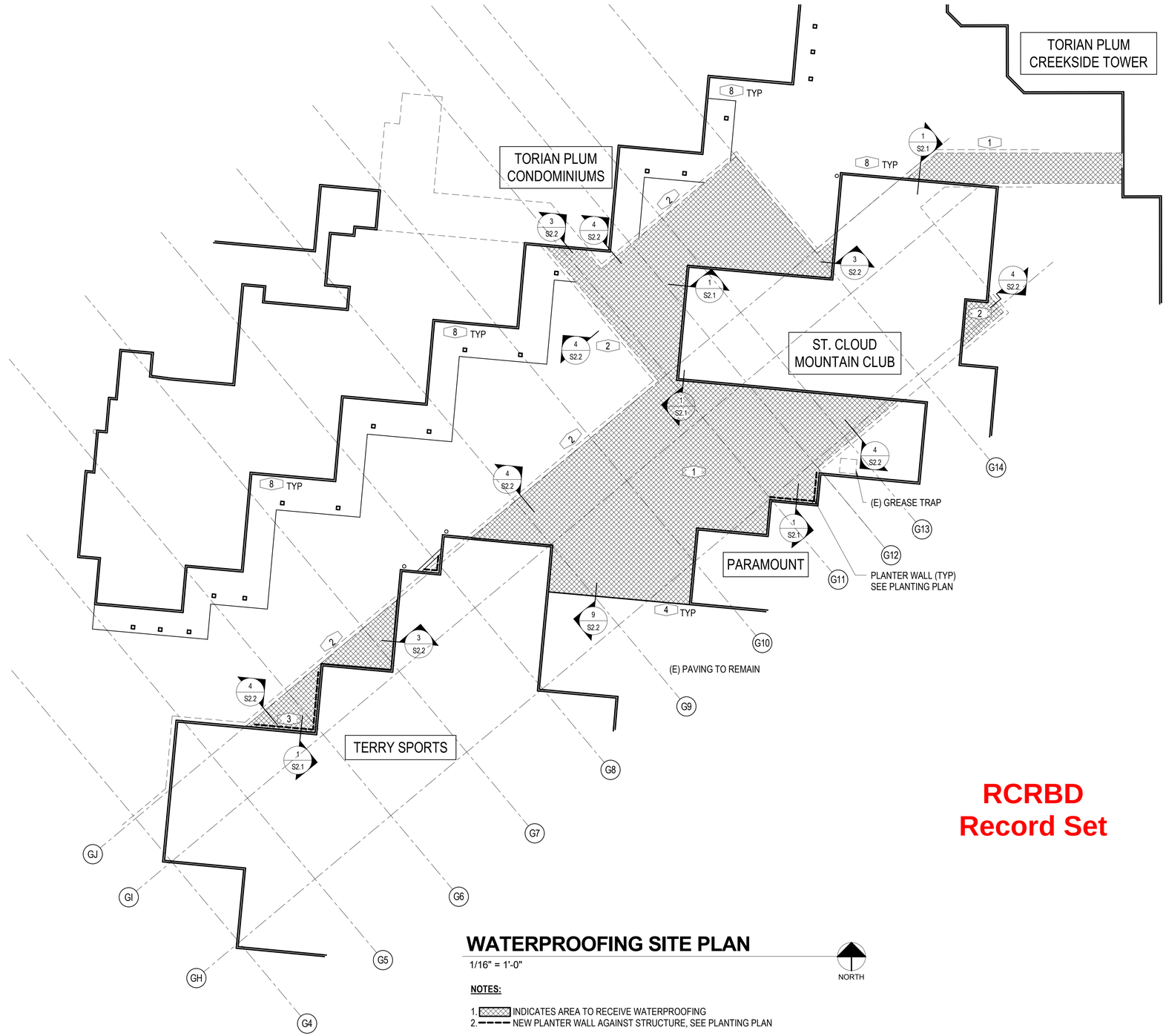

WATERPROOFING SITE PLAN

1/16" = 1'-0"

NORTH

NOTES:

1. INDICATES AREA TO RECEIVE WATERPROOFING
2. NEW PLANTER WALL AGAINST STRUCTURE, SEE PLANTING PLAN

RCRBD Record Set

weink ASSOCIATES
PLANNERS & LANDSCAPE ARCHITECTS
303.628.0003

MARTIN/MARTIN CONSULTING ENGINEERS
12499 WEST COLFAX AVENUE, LAKEWOOD, COLORADO 80215
MAIN 303.431.6300 MARTINMARTIN.COM

37194
3/6/2018
PROFESSIONAL ENGINEER

WATERPROOFING / RENOVATION - PHASE 2
TORIAN PLUM PARKING STRUCTURE
STEAMBOAT SPRINGS, CO

Date 03.06.2018
Drawn By AC/JW
Reviewed by DW/KD
Job No. 17.0424

REVISIONS

ISSUE	DATE

Issue:
100% Construction Documents

Sheet Title:
WP -SITE PLAN

Sheet Number
S1.2

MM JOB #: 17.0424
PRINCIPAL: JOHN LUND
EOR: JOHN LUND
PROJECT MANAGER: DAVID WITTMAN

DESIGNERS: KEVIN DUNAM
DATE PRINTED: 3/5/2018 6:59:13 PM
FILE PATH: C:\Proj\17.0424 - Torian Plum Phase 2 - R17_acontreras@martinmartin.com.rvt

RCRBD
Record Set

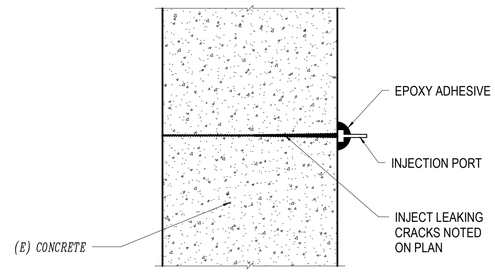

NOTES:
1. REPAIR SPALLED EDGES PER DETAIL

4 NO SCALE REPAIR OF LEAKING CRACKS

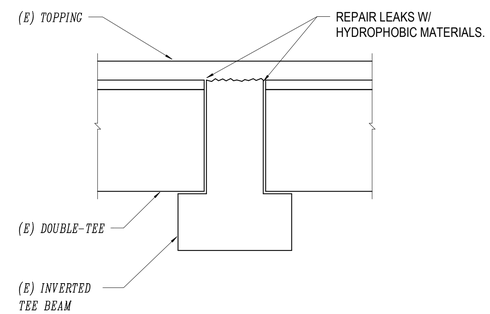

5 NO SCALE REPAIR OF INVERTED TEE BEAM JOINT LEAKS

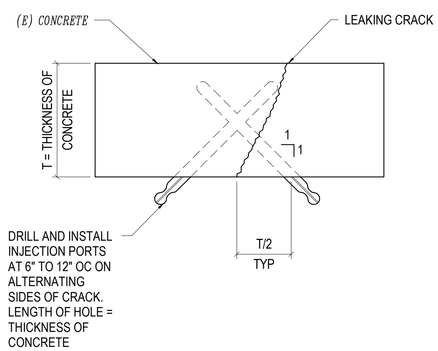

1. FLUSH HOLES WITH WATER.
2. INJECT CRACK WITH EXPANDING HYDROPHOBIC POLYURETHANE GROUT.
3. REMOVE INJECTION PORTS WHEN FINISHED.

6 NO SCALE INJECTION OF LEAKING CRACKS

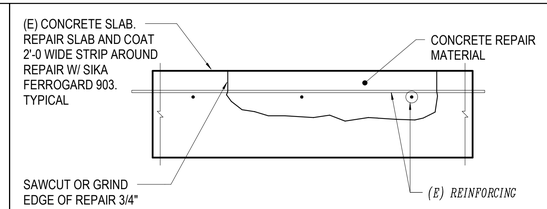

NOTES:

1. LOCATE ALL EXISTING REINFORCING, CONDUIT, ETC, IN AREA TO BE REPLACED USING PACHOMETER OR OTHER MEANS ACCEPTABLE TO ENGINEER.

2. VERIFY, USING 15LB ELECTRIC CHIPPING HAMMER OR OTHER ACCEPTABLE MEANS, THAT DEPTH OF ALL EXISTING REINFORCING, CONDUIT ETC. IS GREATER THAN 3/4" BELOW EXISTING SURFACE OF CONCRETE.

3. SAW CUT PERIMETER OF REPAIR AREA TO 1/2" DEPTH. REPAIR AREA TO BE RECTANGULAR OR SQUARE IN SHAPE. DO NOT CUT REINFORCING, CONDUIT, ETC. HAND CHIP AROUND SUCH ITEMS.

4. CHIP OUT ENTIRE REPAIR AREA TO A MINIMUM DEPTH OF 1/2" UNDERCUT BY 3/4" MINIMUM ALL REINFORCING BARS WHICH HAVE MORE THAN HALF THEIR DIAMETER EXPOSED.

5. CLEAN ALL EXPOSED REINFORCING, CONDUIT, ETC. TO REMOVE ALL TRACES OF RUST USING SANDBLASTING OR WIRE-WHEEL GRINDER.

6. ALLOW ENGINEER TO INSPECT REINFORCING. IF OVER 10% OF BARS CROSS-SECTIONAL AREA IS LOST AT ANY LOCATION SPLICE IN NEW REINFORCING USING MECHANICAL SPLICERS OR CLASS 'B' LAP SPLICE EACH SIDE OF DAMAGED AREA AS DIRECTED BY ENGINEER.

7. SATURATE SURFACE OF REPAIR AREA WITH WATER AND KEEP WET USING A MIST-TYPE SPRINKLER FOR A MINIMUM OF 24 HOURS.

8. ALLOW SURFACE OF CONCRETE TO AIR-DRY, WITH NO STANDING WATER. SUBSTRATE SHALL BE SATURATED SURFACE DRY (SSD) DURING APPLICATION OF REPAIR MORTAR.

9. COAT ALL NEW AND ADDED REINFORCING WITH BASF ZINCRICH REBAR PRIMER OR APPROVED EQUAL IN ACCORDANCE WITH MANUFACTURER'S INSTRUCTIONS.

10. REPAIR MORTAR SHALL BE BASF (MASTER EMACO T1060 OR 1061 RAPID MORTAR OR APPROVED EQUAL INSTALLED IN STRICT ACCORDANCE WITH MANUFACTURER'S INSTRUCTIONS.

11. APPLY A SCRUB COAT OF NEAT REPAIR MORTAR. SCRUB REPAIR MORTAR INTO THE CONCRETE SUBSTRATE USING A NYLON BRUSH, FILLING ALL PORES AND VOIDS IN CONCRETE.

12. WORK REPAIR MORTAR INTO THE REPAIR AREA STARTING AT THE EDGES AND WORKING TOWARD THE CENTER. FORCE REPAIR MORTAR AGAINST EDGES OF REPAIR. MAXIMUM DEPTH OF REPAIR MORTAR = 1 1/2" PER LIFT. WHERE MULTIPLE LIFTS ARE REQUIRED, SCORE TOP OF EACH LIFT TO PROVIDE A ROUGHENED SURFACE FOR THE NEXT LIFT. ALLOW PRECEDING LIFT TO FINAL SET (30 MINUTES MINIMUM) BEFORE APPLYING NEXT LIFT OF MORTAR. SATURATE SURFACE WITH WATER AND SCRUB NEAT MORTAR INTO PRECEDING LIFT BEFORE APPLYING FRESH MATERIAL.

13. FINISH WITH WOOD OR SPONGE FLOAT TO SMOOTH SURFACE.

14. WET CURE HORIZONTAL SURFACES FOR 7 DAYS, COMMENCING IMMEDIATELY AFTER FINISHING IS COMPLETE. COVER REPAIR AREA WITH WET BURLAP, KEEP BURLAP CONTINUOUSLY WET DURING CURING PERIOD. CURE VERTICAL AND OVERHEAD SURFACES WITH HIGH SOLIDS WATER-BASED CURING COMPOUND, MASTER BUILDERS "MASTERKURE 200W" OR APPROVED EQUAL.

2 NO SCALE CONCRETE SPALL/DELAMINATION REPAIR

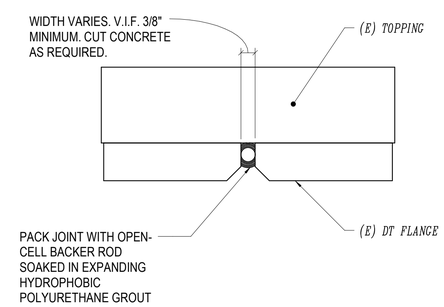

NOTES:
1. MIST JOINT WITH WATER IMMEDIATELY BEFORE INSTALLING BACKER ROD. MIST BACKER ROD WITH WATER AFTER INSTALLATION. TRIM EXCESS AFTER GROUT HAS CURED COMPLETELY.
2. CLEAN JOINT COMPLETELY
3. RE-INJECT LEAKING JOINTS USING NEEDLES

3 NO SCALE SEAL FOR LEAKING DOUBLE-TEE JOINTS

weink ASSOCIATES
PLANNERS & LANDSCAPE ARCHITECTS
303.628.0003

MARTIN/MARTIN CONSULTING ENGINEERS
12499 WEST COLFAX AVENUE, LAKEWOOD, COLORADO 80215
MAIN 303.431.6300 MARTINMARTIN.COM

WATERPROOFING / RENOVATION - PHASE 2
TORIAN PLUM PARKING STRUCTURE
STEAMBOAT SPRINGS, CO

Date 03.06.2018
Drawn By AC/JW
Reviewed by DW/KD
Job No. 17.0424

REVISIONS

ISSUE	DATE

Issue:
100% Construction Documents

Sheet Title:
DETAILS

Sheet Number
S2.0

MM JOB #: 17.0424
PRINCIPAL: JOHN LUND
EOR: JOHN LUND
PROJECT MANAGER: DAVID WITTMAN
DESIGNERS: KEVIN DUNAM
DATE PRINTED: 3/5/2018 6:59:13 PM
FILE PATH: C:\Proj\17.0424 - Torian Plum Phase 2 - R17_acontreras@martinmartin.com.rvt

RCRBD
Record Set

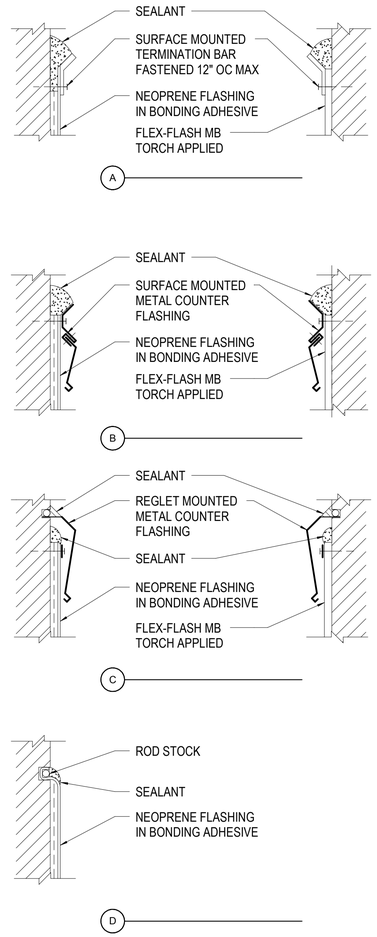

8 1 1/2" = 1'-0" ALTERNATE METAL FLASHING TERMINATIONS

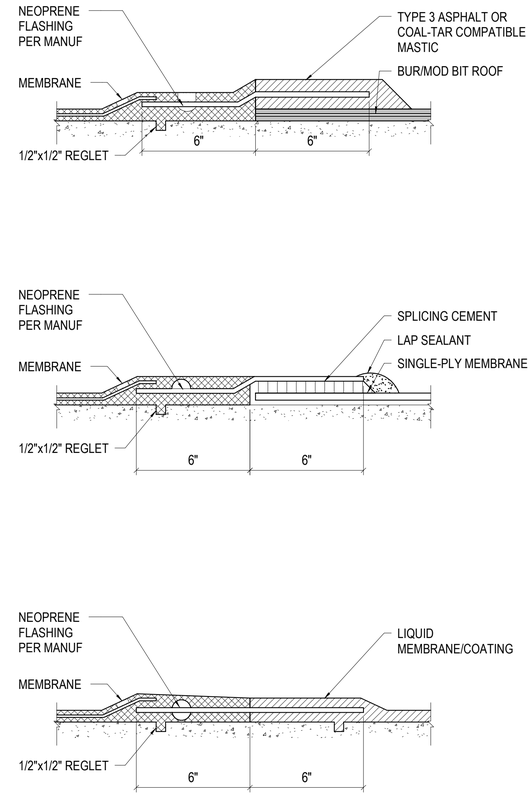

NOTE:
1. CHECK WITH OTHER ROOFING MATERIAL SUPPLIER FOR SPECIFIC TIE-IN INSTRUCTIONS.
2. FOR HORIZONTAL TIE-INS, A 1/2"x1/2" REGRET MUST BE CUT INTO THE DECK TO PROVIDE A WATER STOP FOR THE MEMBRANE

5 3" = 1'-0" TYPICAL TIE-IN DETAILS (HORIZ)

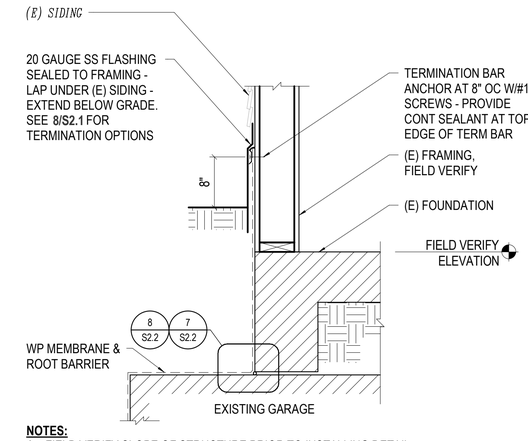

NOTES:
1. FIELD VERIFY SLOPE OF STRUCTURE PRIOR TO INSTALLING DETAIL
2. SEE DETAILS 2/S2.2 & 3/S2.2 FOR TYPICAL CORNER REINF

1 1" = 1'-0" PLANTER WP DETAIL

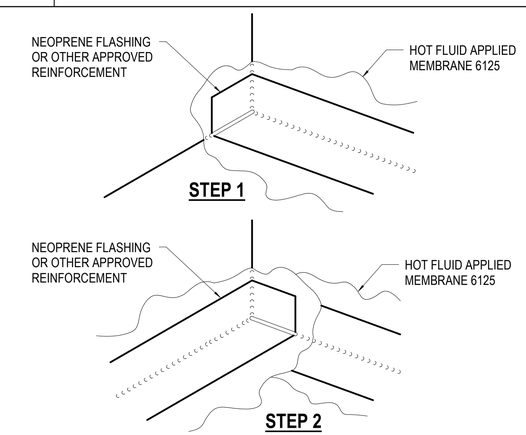

NOTE:
1. COMPLETELY ENCAPSULATE ALL EXPOSED REINFORCING WITH A TOP COATING OF MONOLITHIC MEMBRANE 6125. NO REINFORCING SHOULD BE LEFT EXPOSED OVERNIGHT

2 NO SCALE INSIDE CORNER REINF

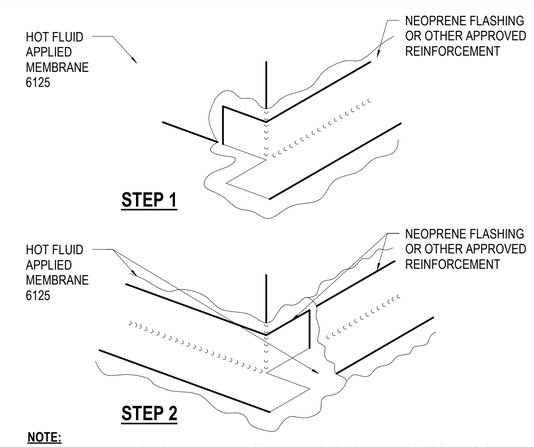

NOTE:
1. COMPLETELY ENCAPSULATE ALL EXPOSED REINFORCING WITH A TOP COATING OF MONOLITHIC MEMBRANE 6125. NO REINFORCING SHOULD BE LEFT EXPOSED OVERNIGHT

3 NO SCALE OUTSIDE CORNER REINFORCEMENT

weink ASSOCIATES
PLANNERS & LANDSCAPE ARCHITECTS
303.628.0003

MARTIN/MARTIN CONSULTING ENGINEERS
12499 WEST COLFAX AVENUE, LAKEWOOD, COLORADO 80215
MAIN 303.431.6300 MARTINMARTIN.COM

STATE OF COLORADO 37194 3/6/2018 PROFESSIONAL ENGINEER

WATERPROOFING / RENOVATION - PHASE 2

TORIAN PLUM PARKING STRUCTURE

STEAMBOAT SPRINGS, CO

Date	03.06.2018
Drawn By	AC/JW
Reviewed by	DW/KD
Job No.	17.0424

REVISIONS

ISSUE	DATE

Issue:
100% Construction Documents

Sheet Title:
DETAILS

Sheet Number
S2.1

MM JOB #: 17.0424
PRINCIPAL: JOHN LUND
EOR: JOHN LUND
PROJECT MANAGER: DAVID WITTMAN

DESIGNERS: KEVIN DUNAM
DATE PRINTED: 3/5/2018 6:59:14 PM
FILE PATH: C:\Pro\17.0424 - Torian Plum Phase 2 - R17_acontreras@martinmartin.com.rvt

RCRBD
Record Set

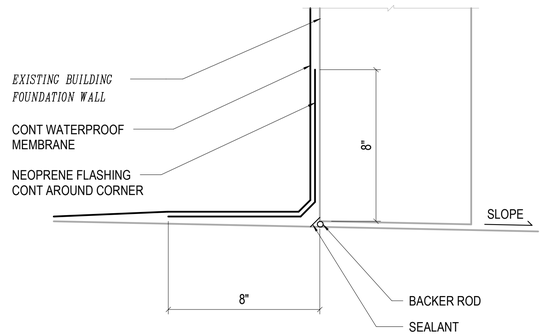

7 3" = 1'-0" UPSLOPE VERTICAL TERMINATION AT WALL

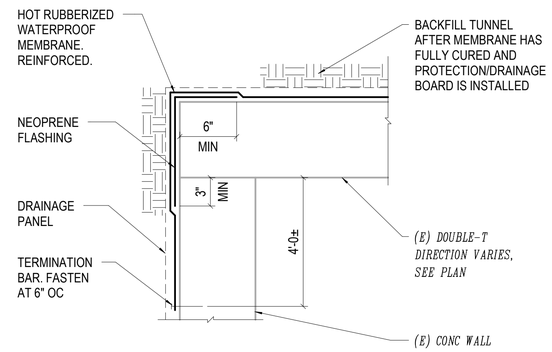

NOTE:

1. REPAIR ALL CONCRETE DELAMINATIONS AND HONEYCOMBS PRIOR TO MEMBRANE INSTALLATION.

4 NO SCALE WATERPROOFING AT WALL

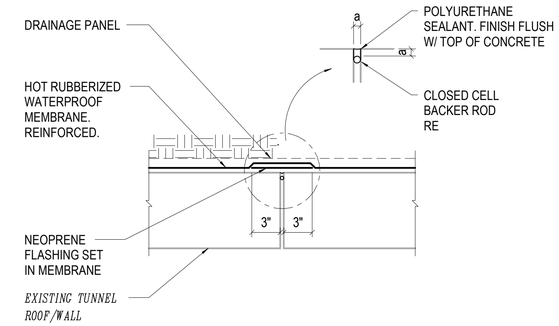

NOTE:

1. JOINT DETAIL TYPICAL 3 SIDES OF TUNNEL

1 NO SCALE TYPICAL JOINT

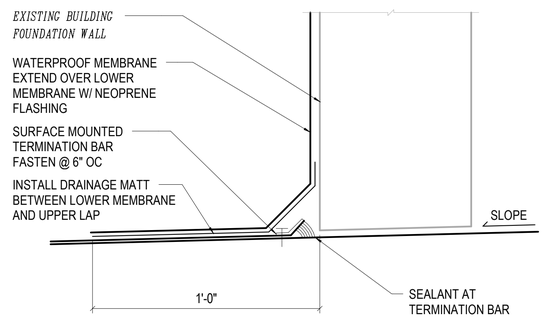

8 3" = 1'-0" DOWNSLOPE VERTICAL TERMINATION AT WALL

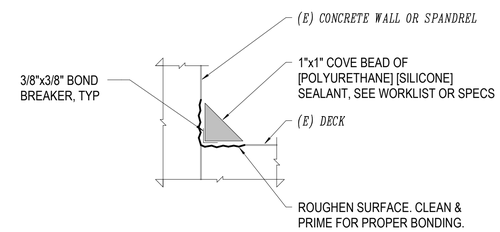

5 6" = 1'-0" COVE JOINT

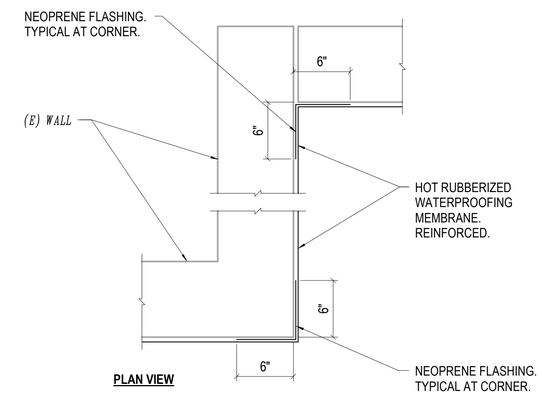

NOTES:

1. SEE DETAIL 3/S2.2 FOR TYPICAL CORNER REINF

2 NO SCALE MEMBRANE AT CORNER

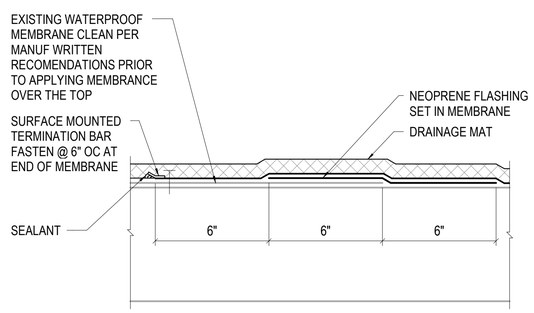

NOTES:

1. SEE 5/S2.1 FOR TYP TIE IN TO (E) MEMBRANE DETAILS

9 3" = 1'-0" NEW WATERPROOFING TO (E) TIE-IN

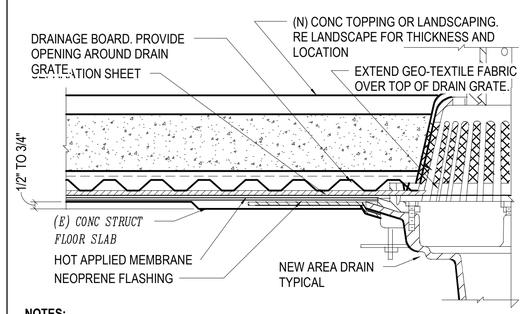

NOTES:

1. AREA AROUND DRAIN SHOULD BE DEPRESSED/SUMPED TO PROMOTE POSITIVE WATER DRAINAGE.
2. REINFORCEMENT SHALL BE ONE SHEET EXTENDING A MINIMUM OF 6" BEYOND THE DRAIN FLANGE ON ALL SIDES AND SECURED IN CLAMPING RING AT DRAIN.
3. ALL DRAINS ARE REQUIRED TO HAVE FLASHING CLAMPING RING ASSEMBLIES. CONSULT SPECIFIC DRAIN MANUFACTURER FOR ADDITIONAL ACCESSORIES (i.e. DEBRIS SCREENS, LOW-PROFILE DOMES, EXTENSIONS, ETC.).
4. CONTRACTOR TO PROVIDE DESIGN-BUILD PRICING FOR PLUMBING, INCLUDING DRAIN SELECTION AND DESIGN OF ASSOCIATED PIPING
5. SEE MANUFACTURER'S RECOMMENDATIONS FOR ADDITIONAL REQUIREMENTS.

6 NO SCALE WATERPROOFING AT DRAIN

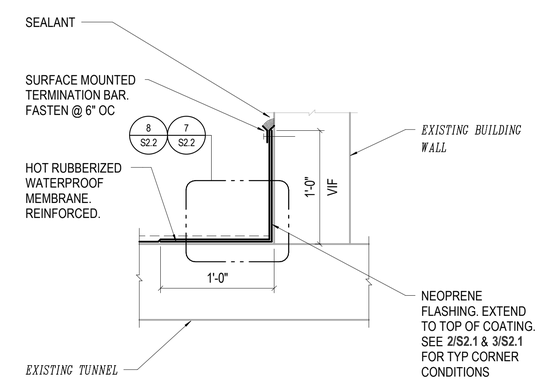

NOTES:

1. SEE 8/S2.1 FOR TYPICAL COUNTERFLASHING TERMINATIONS WHERE MEMBRANE IS EXPOSED

3 NO SCALE TYP VERTICAL TERMINATION AT WALL

weink ASSOCIATES PLANNERS & LANDSCAPE ARCHITECTS 303.628.0003
MARTIN/MARTIN CONSULTING ENGINEERS
12499 WEST COLFAX AVENUE, LAKEWOOD, COLORADO 80215
MAIN 303.431.6300 MARTINMARTIN.COM

WATERPROOFING / RENOVATION - PHASE 2
TORIAN PLUM PARKING STRUCTURE
STEAMBOAT SPRINGS, CO

Date	03.06.2018
Drawn By	AC/JW
Reviewed by	DW/KD
Job No.	17.0424

REVISIONS

ISSUE	DATE

Issue:
100% Construction Documents

Sheet Title:
WATERPROOFING DETAILS

Sheet Number
S2.2

MM JOB #: 17.0424
PRINCIPAL: JOHN LUND
EOR: JOHN LUND
PROJECT MANAGER: DAVID WITTMAN

DESIGNERS: KEVIN DUNAM
DATE PRINTED: 3/5/2018 6:59:14 PM
FILE PATH: C:\Proj\17.0424 - Torian Plum Phase 2 - R17_acontreras@martinmartin.com.rvt

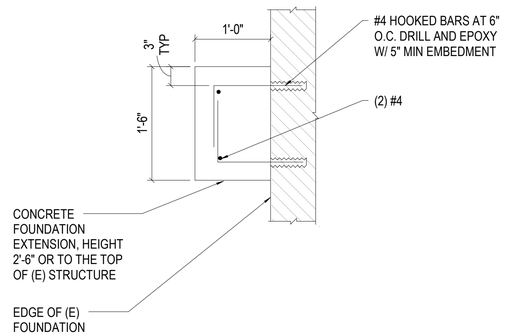

7 NO SCALE SCREEN FENCE FOUNDATION EXTENSION

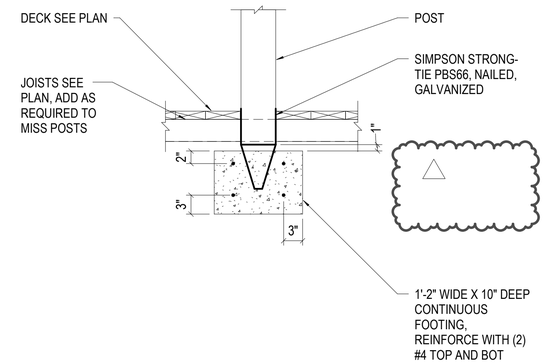

4 1" = 1'-0" SHADE STRUCTURE COLUMN BASE

RCRBD

RECORD SET

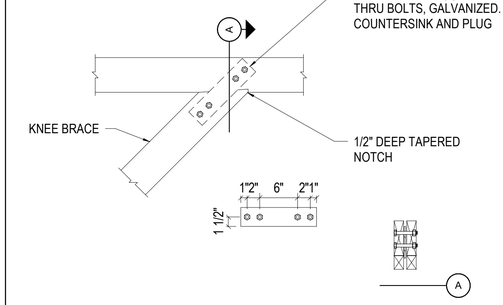

1 1" = 1'-0" SHADE STRUCTURE CONN. 1

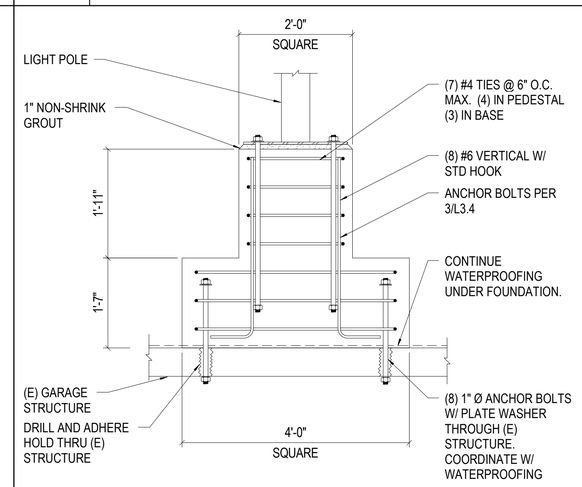

5 3/4" = 1'-0" LIGHT POLE FOUNDATION

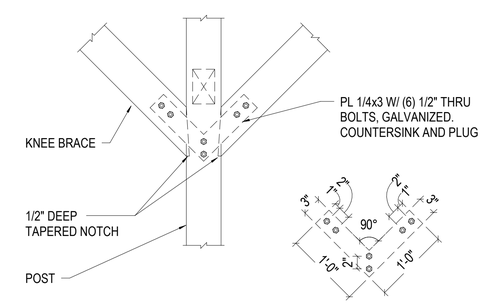

2 1" = 1'-0" SHADE STRUCTURE CONN. 2

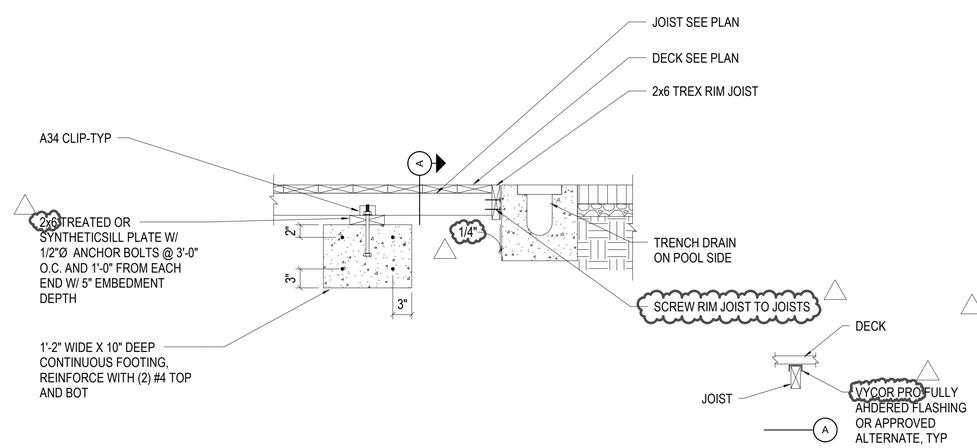

6 1" = 1'-0" SHADE STRUCTURE BASE DETAIL

weink ASSOCIATES
PLANNERS & LANDSCAPE ARCHITECTS
303.628.0003

MARTIN/MARTIN CONSULTING ENGINEERS
12499 WEST COLFAX AVENUE, LAKEWOOD, COLORADO 80215
MAIN 303.431.6300 MARTINMARTIN.COM

WATERPROOFING / RENOVATION - PHASE 2
TORIAN PLUM PARKING STRUCTURE
STEAMBOAT SPRINGS, CO

Date	03.06.2018
Drawn By	SHB
Reviewed by	DW
Job No.	17.0424

REVISIONS

ISSUE	DATE
ADDENDUM #4	1/19/2018
BLDG DEPT #1	3/6/2018

Issue:
100% Construction Documents

Sheet Title:
SITE DETAILS

Sheet Number
S2.3

MM JOB #: 17.0424
PRINCIPAL: JOHN LUND
EOR: JOHN LUND
PROJECT MANAGER: DAVID WITTMAN

DESIGNERS: KEVIN DUNAM
DATE PRINTED: 3/5/2018 6:59:15 PM
FILE PATH: C:\Proj\17.0424 - Torian Plum Phase 2 - R17_acontreras@martinmartin.com.rvt