HVAC SPECIFICATIONS

PART 1 - GENERAL

1.1 GENERAL INTENT

A. THE INTENTION OF THE CONTRACT DOCUMENTS IS TO INCLUDE ALL LABOR AND MATERIALS, AND EQUIPMENT, NECESSARY, OR REASONABLY INFERABLE AS BEING NECESSARY, FOR FURNISHING, INSTALLATION AND TESTING, COMPLETE AND READY FOR SAFE OPERATION OF SYSTEM DESCRIBED HEREIN.

B. SUBMISSION OF A PROPOSAL SHALL BE CONSTRUED AS EVIDENCE THAT THE CONTRACTOR HAS MADE A THOROUGH EXAMINATION OF THE SITE, AND ALL EXISTING CONDITIONS AND LIMITATIONS WHICH AFFECT THIS WORK LATER CLAIMS SHALL NOT BE MADE FOR LABOR, EQUIPMENT OR MATERIALS REQUIRED BECAUSE OF DIFFICULTIES ENCOUNTERED, WHICH COULD HAVE BEEN FORESEEN DURING SUCH AN EXAMINATION.

C. THE DRAWINGS INDICATE DIAGRAMMATICALLY THE EXTENT, GENERAL CHARACTER, AND LOCATION OF THE WORK TO BE PERFORMED. WHERE MINOR ADJUSTMENTS OF THE WORK ARE NECESSARY FOR PURPOSES OF FABRICATION OR INSTALLATION OF ITEMS, THE CONTRACTOR SHALL MAKE SUCH ADJUSTMENTS WITH NO ADDED COMPENSATION, WHERE SUCH ADJUSTMENTS AFFECT FUNCTIONAL OR AESTHETIC DESIGN OF THE WORK, THEY SHALL FIRST BE SUBMITTED TO THE ARCHITECT FOR REVIEW AND APPROVAL.

D. SITE UTILITIES: THE MECHANICAL DOCUMENTS INDICATE CONNECTION LOCATION OF VARIOUS BUILDING SERVICE. COORDINATE WORK WITH THE SITE UTILITIES CONTRACTOR TO ENSURE PROPER INVERT ELEVATION, PIPE SLOPE GRADIENT PIPE SIZE AND SEPARATION WITHIN TRENCH WORK. NOTIFY ARCHITECT OR ENGINEER OF ANY DISCREPANCY BETWEEN DRAWINGS AND FIELD CONDITIONS

E. COMPLY WITH ALL LOCAL AND STATE CODES REGARDING SEISMIC SUPPORT AND ISOLATION. NOT ALL SEISMIC REQUIREMENTS ARE SHOWN ON THESE DRAWINGS. CONTRACTOR SHALL MEET THE REQUIREMENTS OF THE AUTHORITY HAVING JURISDICTION SEISMIC SUPPORT/ISOLATION OF HIS WORK.

1.2 GENERAL COORDINATION

A. THE CONTRACTOR IS RESPONSIBLE FOR INSTALLATION OF A SATISFACTORY COMPLETE, AND FULLY OPERATIONAL PIECE OF WORK IN ACCORDANCE WITH TRUE INTENT OF THE DRAWINGS AND SPECIFICATIONS.

B. CONTRACTOR SHALL CONSULT ALL DRAWING FOR THE PROJECT TO DETERMINE THAT THE WORK AND EQUIPMENT WILL FIT AS PLANNED.

C. THE LOCATION OF PIPING, DUCTS, EQUIPMENT, ETC., SHALL BE CHECKED TO ENSURE CLEARANCE FROM OPENINGS, STRUCTURAL MEMBER, CABINETS, LIGHTS, OUTLETS AND EQUIPMENT HAVING FIXED LOCATIONS. THIS SHALL BE ACCOMPLISHED PRIOR TO FABRICATION OF PIPE OR DUCTS.

D. IF, AT ANY TIME, AND IN ANY CASE, CHANGES IN LOCATION OF PIPING, DUCTS, EQUIPMENT, ETC., BECOMES NECESSARY DUE TO EXISTING OBSTACLES OR INSTALLATION OF OTHER TRADES SHOWN ON ANY OF THE PROJECT DRAWINGS AND SUCH CONFLICT COULD HAVE BEEN AVOIDED BY PROPER COORDINATION BETWEEN TRADES OR PROPER PRE-PLANNING OF WORK, SUCH REQUIRED CHANCES SHALL BE MADE BY THE CONTRACTOR AT NO EXTRA COST. THESE CHANCES ARE TO BE RECORDED ON THE RECORD DRAWINGS.

E. THIS CONTRACTOR IS RESPONSIBLE TO PROVIDE ALL INCIDENTAL ELECTRICAL INTERCONNECTIONS, CONTROL WIRING ETC., WHICH ARE NECESSARY FOR SYSTEM COMPLETION AND WHICH ARE NOT SPECIFICALLY SHOWN OR OTHERWISE INDICATED ON THE ELECTRICAL DRAWINGS OR SPECIFIED IN DIVISION 26.

F. ALL ELECTRICAL WORK INCIDENTAL TO OR ACCOMPLISHED UNDER THIS DIVISION SHALL COMPLY WITH ALL REQUIREMENTS OF DIVISION 26.

G. PLANS ARE DIAGRAMMATIC IN NATURE. CONTRACTOR IS RESPONSIBLE FOR REFERRING TO THE DESIGN DOCUMENTS FOR ALL OTHER DISCIPLINES FOR PROJECT CONSTRUCTION AND OTHER DETAILS WHICH AFFECT THE MECHANICAL INSTALLATION. CONTRACTOR SHALL CONFER WITH ALL OTHER TRADES FOR FINISH ADJACENT TO ITS WORK AND ARRANGE TO HAVE VISIBLE PORTIONS OF THIS WORK (SUCH AS ACCESS DOORS, VALVES, SPRINKLER HEADS, ESCUTCHEONS, ETC.) MERGE WITH THE FINISH IN A MANNER SATISFACTORY TO THE ARCHITECT.

H. CONTRACTOR SHALL IDENTIFY ALL SERVICEABLE ITEMS (VALVES, DAMPERS, COILS, ETC.) SO THAT THE CEILING SUBCONTRACTOR MAY KNOW WHERE TO INSTALL ACCESS-TYPE PANELS SHOULD A LIFT-UP TYPE CEILING NOT BE INSTALLED. THIS CONTRACTOR SHALL PROVIDE ACCESS PANELS FOR HIS WORK UNLESS SPECIFICALLY NOTED ON THE DRAWINGS. ARCHITECT SHALL APPROVE LOCATIONS OF ACCESS PANELS PRIOR TO INSTALLATION.

I. CEILING HEIGHTS: ARCHITECTURAL DRAWINGS SHALL BE CHECKED FOR CEILING HEIGHTS, WALLS, AND CABINETS THAT ARE INTENDED TO CONCEAL WORK OF THIS SECTION. WHERE CONFLICTS OCCUR, THE ARCHITECT SHALL BE NOTIFIED PRIOR TO INSTALLATION OF THE WORK. LOCATION OF EXPOSED WORK SUCH AS LIGHTS, DIFFUSERS, SPEAKERS, SPRINKLER HEADS TAKE PRECEDENCE OVER CONCEALED WORK.

J. CONTRACTOR SHALL EXERCISE CARE TO MINIMIZE ANY DISTURBANCE TO ADJACENT AREAS OF THE BUILDING WHICH ARE TO REMAIN IN OPERATION. ISOLATE WORK AREAS BY TEMPORARY PARTITIONS, TARPS, ETC., TO KEEP DUST AND DIRT IN THE CONSTRUCTION AREA.

K. PROVED ALL NECESSARY FLASHING, SEALING, ETC., TO MAINTAIN THE WATERPROOF INTEGRITY OF THE BUILDING AS REQUIRED BY THE INSTALLATION OR REMOVAL OF ITEMS AS REQUIRED BY THIS SCOPE OF WORK.

L. INSTALL ALL WORK OF THIS SCOPE TO BE READILY ACCESSIBLE FOR OPERATION, MAINTENANCE, AND REPAIR. MINOR DEVIATIONS FROM THE DRAWINGS MAY BE MADE TO ACCOMPLISH THIS, BUT CHANGES INVOLVING OTHER TRADES MAY NOT BE MADE WITHOUT PRIOR APPROVAL.

M. ALL PENETRATIONS MADE THROUGH RATED ASSEMBLIES TO ACCOMMODATE WORK OF THIS SECTION, MUST BE SEALED TO MAINTAIN THE RATING OF SUCH ASSEMBLY BY A U.L. RECOGNIZED SEALING METHOD.

N. PROVIDE ALL CUTTING AND PATCHING REQUIRED FOR INSTALLATION OF THIS WORK. COORDINATE ALL BLOCKING, SUPPORT, ETC., NECESSARY FOR THE INSTALLATION OF THIS WORK WITH THE GENERAL CONTRACTOR.

1.3 CODES, STANDARDS, PERMITS, AND FEES

A. ALL APPLICABLE CODE LAWS AND REGULATIONS GOVERNING OR RELATING TO ANY PORTION OF THIS WORK ARE HEREBY INCORPORATED INTO AND MADE A PART OF THESE SPECIFICATIONS. THEIR PROVISIONS SHALL BE CARRIED OUT BY THE CONTRACTOR WHO SHALL INFORM THE ARCHITECT IN WRITING PRIOR TO SUBMITTING A BID, OF ANY WORK OR MATERIALS WHICH VIOLATE ANY OF THE ENFORCED LAWS, CODES, OR REGULATION. IF THE CONTRACTOR PERFORMS ANY WORK CONTRARY TO SUCH LAWS, ORDINANCES, RULES AND REGULATIONS HE SHALL ASSUME FULL RESPONSIBILITY, AND SHALL BEAR ALL COSTS ASSOCIATED WITH BRINGING WORK INTO COMPLIANCE.

B. WHERE DRAWING OR SPECIFICATIONS CALL FOR MATERIAL OR CONSTRUCTION OF A BETTER QUALITY OR HIGHER CAPACITY THAN REQUIRED BY THE ABOVE-MENTIONED CODES AND STANDARDS, THE PROVISIONS OF THE DRAWINGS OR SPECIFICATIONS SHALL TAKE PRECEDENCE OVER THE REQUIREMENTS OF THE CODES AND STANDARDS.

C. THE RESPECTIVE SUB-CONTRACTOR, AT HIS EXPENSE, SHALL OBTAIN ALL PERMITS AND FEES REQUIRED FOR THIS SCOPE OF WORK ON THIS PROJECT. THE SUB-CONTRACTORS SHALL ALSO SCHEDULE ALL REQUIRED INSPECTIONS AND OBTAIN CERTIFICATES FOR HIS WORK, AT HIS EXPENSE.

D. THE FOLLOWING SPECIFIC STANDARDS SHALL BE CONSIDERED AS MINIMUM REQUIREMENTS FOR WORK OF THIS SECTION:
  1. DUCTWORK: ALL DUCTWORK SHALL BE FABRICATED AND INSTALLED PER THE PUBLISHED STANDARDS OF THE AMERICAN SOCIETY OF HEATING, REFRIGERATION, AND AIR CONDITIONING ENGINEERS (ASHRAE) AND THE SHEET METAL AND AIR CONDITIONING NATIONAL ASSOCIATION (SMACNA), AND MEET THE REQUIREMENTS OF NFPA 90 AND NFPA 91.
  2 FILTERS: ALL FILTER MEDIA SHALL BE UL CLASS 2.

1.4 SUBMITTALS AND SUBSTITUTIONS

A. SUBMITTAL MATERIALS SHALL BE COMPLETE IN EVERY RESPECT AND SHALL CLEARLY INDICATE EQUIPMENT FEATURES, DIMENSIONS, WEIGHTS, PERFORMANCE CHARACTERISTICS, AND CAPACITIES. CAPACITY AND PERFORMANCE CALCULATIONS SHALL BE ADJUSTED TO INDICATE ACTUAL EQUIPMENT PERFORMANCE AT THE PROJECT ELEVATION. LITERATURE OR DRAWINGS THAT DESCRIBE MORE THAN ONE MODEL OR SIZE OF EQUIPMENT SHALL BE MARKED WITH ARROWS OR OTHERWISE CLEARLY INSCRIBED TO IDENTIFY THE ACTUAL EQUIPMENT THAT WILL BE FURNISHED. ALL OPTIONS AND SPECIAL PARTS OF FEATURE SHALL ALSO BE CLEARLY IDENTIFIED. ALL SUBMITTED MATERIALS MUST BE CLEAR, COMPLETE AND LEGIBLE. ALL SUBMITTALS OF THIS SCOPE MUST BE SUBMITTED AT ONE TIME; MULTIPLE AND VARIED SUBMITTALS WILL BE REJECTED.

B. SUBMITTALS FOR ALL EQUIPMENT SHALL BE ROUTED THROUGH AND REVIEWED BY THE CONTRACTOR. THE CONTRACTOR SHALL CHECK ALL SUBMITTALS FOR ADEQUATE IDENTIFICATION, CORRECTNESS, AND COMPLIANCE WITH CONTRACT DRAWINGS AND SPECIFICATIONS AND APPLY A STAMP OF APPROVAL. FOR SUBMITTALS THAT ARE REQUIRED TO BE REVIEWED BY THE ENGINEER, A DIGITAL COPY SHALL BE FORWARDED REVIEW AFTER REVIEW AND APPROVAL BY THE CONTRACTOR. THESE SHALL BE RETURNED AND SHALL BE REVISED AND RESUBMITTED UNTIL ACCEPTED BY THE ENGINEER. PROVIDE PRODUCT DATA FOR EACH PIECE OF EQUIPMENT/COMPONENT LISTED BELOW:
  1. AIR MOVING EQUIPMENT.
  2. GRILLES, REGISTERS, AND DIFFUSERS.
  3. EXHAUST HOODS.
  4. WHERE SEISMIC SUPPORT IS REQUIRED BY CODES, PROVIDE SHOP DRAWINGS AND SUPPORTING CALCULATIONS IN ACCORDANCE WITH THE ASCE 7 CHAPTER 13. CALCULATIONS AND SHOP DRAWINGS SHALL BE SIGNED AND SEALED BY A LICENSED ENGINEER IN THE STATE IN WHICH THE PROJECT SITE OCCURS.

C. APPROVED MANUFACTURERS, WHICH MAY SUBMIT EQUAL PRODUCT TO THOSE SPECIFIED, ARE LISTED IN THE EQUIPMENT SCHEDULES. ANY SUBMITTAL FOR CONSIDERATION AS AN EQUAL TO THAT SCHEDULED MUST CONTAIN ALL INFORMATION REQUIRED TO EVALUATE THIS CLAIM. MANUFACTURERS NOT LISTED AS EQUAL MUST SUBMIT IN WRITING FOR REVIEW FIVE DAYS PRIOR TO BID CLOSING. CONTRACTOR IS RESPONSIBLE TO ASSURE ANY SUBSTITUTED ITEM MEETS ALL PHYSICAL AND PERFORMANCE REQUIREMENTS AS INTENDED IN THE DESIGN DOCUMENTS.

D. APPROVAL SUBMITTALS BY THE ENGINEER SHALL NOT RELIEVE THE CONTRACTOR FROM RESPONSIBILITY FOR DEVIATIONS FROM DRAWINGS OR SPECIFICATIONS, NOR SHALL IT RELIEVE HIM FROM RESPONSIBILITY FOR ERRORS IN SHOP DRAWINGS OR OTHER SUBMITTAL LITERATURE.

E. CONTRACTOR HAS SOLE RESPONSIBILITY TO COORDINATE ANY SUBSTITUTIONS WITH ALL OTHER DISCIPLINES. EQUIPMENT OF GREATER POWER, DIMENSIONS, CAPACITIES, AND RATINGS MAY BE FURNISHED PROVIDED SUCH PROPOSED EQUIPMENT IS APPROVED IN WRITING AND CONNECTING MECHANICAL AND ELECTRICAL SERVICES, CIRCUIT BREAKERS, CONDUIT, MOTORS, BASES, AND EQUIPMENT SPACES ARE INCREASED. NO ADDITIONAL COSTS WILL BE ACCEPTED FOR THESE INCREASED. NO ADDITIONAL COSTS WILL BE ACCEPTED FOR THESE INCREASES, IF LARGER EQUIPMENT IS PROVIDED. IF MINIMUM ENERGY RATINGS OR EFFICIENCIES OF THE EQUIPMENT ARE SPECIFIED. THE EQUIPMENT MUST MEET THE DESIGN REQUIREMENTS AND COMMISSIONING REQUIREMENTS. DESIGN OF ELECTRICAL REQUIREMENTS IS BASED ON MECHANICAL EQUIPMENT SPECIFIED. MECHANICAL SHALL COORDINATE WITH ELECTRICAL CONTRACTOR IF EQUIPMENT PURCHASED IS DIFFERENT FROM THAT SPECIFIED STILL MEETS DESIGN INTENT, INCLUDING BUT NOT LIMITED TO OVERCURRENT PROTECTION, LOCAL DISCONNECTION MEANS, WIRE SIZING, AND DESIGN COSTS.

1.5 DELIVERY, STORAGE AND HANDLING

A. DELIVER PRODUCTS TO THE PROJECT PROPERLY IDENTIFIED WITH NAMES, MODEL NUMBERS, TYPES, GRADES, COMPLIANCE LABELS, AND OTHER INFORMATION NEEDED FOR IDENTIFICATION.

B. ALL MECHANICAL EQUIPMENT AND MATERIAL ITEMS SHALL BE PROTECTED FROM WEATHER AND VANDALISM PRIOR TO ACTUAL INSTALLATION. FAN WHEELS, PUMPS AND OTHER ROTATING MACHINERY SHALL BE PERIODICALLY ROTATED DURING STORAGE. ANY FACTORY PAINTED EQUIPMENT SCRATCHED OR MARRED DURING SHIPMENT OR CONSTRUCTION SHALL BE RESTORED TO ORIGINAL. "NEW" CONDITION. THIS INCLUDES COMPLETE REPAINTING OF THE EQUIPMENT IF NECESSARY TO PROVIDE EXACT PAINT MATCH.

C. CONTRACTOR IS RESPONSIBLE FOR RECEIVING AND OFFLOADING EQUIPMENT OF HIS SCOPE. IMMEDIATELY UPON RECEIPT, CONTRACTOR SHALL INSPECT ALL EQUIPMENT AND MATERIAL FOR SHIPPING DAMAGE AND REPLACE ANY DEFECTIVE ITEMS AT NO INCREASE TO CONTRACT AMOUNT.

1.6 SEQUENCING AND SCHEDULING

A. COORDINATE MECHANICAL EQUIPMENT INSTALLATION WITH OTHER BUILDING COMPONENTS PRIOR TO ORDERING OR FABRICATION OF ADJOINING WORK.

B. COORDINATE THE INSTALLATION OF REQUIRED SUPPORTING DEVICES AND SET SLEEVES IN POURED-IN-PLACE CONCRETE AND OTHER STRUCTURAL COMPONENTS AS THEY ARE CONSTRUCTED. ARRANGE FOR CHASES, SLOTS, AND OPENINGS IN BUILDING STRUCTURE DURING PROGRESS OF CONSTRUCTION TO ALLOW FOR MECHANICAL INSTALLATIONS.

C. SEQUENCE, COORDINATE AND INTEGRATE INSTALLATIONS OF MECHANICAL MATERIALS AND EQUIPMENT FOR EFFICIENT FLOW OF WORK. COORDINATE INSTALLATION OF LARGE EQUIPMENT REQUIRING POSITIONING PRIOR TO CLOSING IN THE BUILDING.

D. COORDINATION CONNECTION OF MECHANICAL SYSTEMS WITH EXTERIOR UNDERGROUND AND OVERHEAD UTILITIES AND SERVICES. COMPLY WITH REQUIREMENTS OF GOVERNING REGULATIONS, FRANCHISED SERVICE COMPANIES, AND CONTROLLING AGENCIES. COORDINATE CONNECTION OF ELECTRICAL SERVICES.

E. PROVIDE IDENTIFICATION OF ALL EQUIPMENT. COORDINATE INSTALLATION OF IDENTIFYING DEVICES AFTER COMPLETING COVERING AND PAINTING WHERE DEVICES ARE APPLIED TO SURFACES. INSTALL IDENTIFYING DEVICES PRIOR TO INSTALLING ACOUSTICAL CEILINGS AND SIMILAR CONCEALMENT.

1.7 PROJECT CLOSE-OUT

A. CONTRACTOR SHALL FURNISH A WRITTEN GUARANTEE TO REPLACE OR REPAIR ANY DEFECTS IN WORKMAN SHIP OR EQUIPMENT, WHICH DEVELOP WITHIN ONE YEAR FROM ACCEPTANCE BY THE OWNER.

B. CONTRACTOR SHALL MAINTAIN A REDLINE SET OF CONSTRUCTION DRAWINGS SHOWING DEVIATION BETWEEN THE DRAWINGS AND INSTALLED CONDITIONS. THESE SHALL BE PROVIDED OVER TO THE OWNER AT ACCEPTANCE OF THE WORK.

C. PROVIDE THREE (3) COMPLETE SETS OF OPERATION AND MAINTENANCE MANUALS. THESE ARE TO INCLUDE ALL EQUIPMENT CUT-SHEETS, MANUFACTURER RECOMMEND MAINTENANCE PROCEDURES, MANUFACTURERS WARRANTEE INFORMATION, AND CONTRACTORS WARRANTEE LETTER AND CONTACT INFORMATION.

D. PROVIDE THREE (3) REVIEWED BALANCE REPORTS OF WATER AND AIR SYSTEMS AS APPLICABLE.

E. CONTRACTOR SHALL INSTRUCT THE OWNER ON THE OPERATION AND MAINTENANCE OF ALL SYSTEMS PROVIDE UNDER THIS CONTRACT.

PART 2 - PRODUCTS

2.1 GENERAL

A. DUCT DIMENSIONS SHOWN ON PLANS ARE NET FREE AREA.

B. ROUND ELBOWS MUST HAVE A CENTERLINE RADIUS OF NO LESS THAN 1.5 TIMES THE DIAMETER OF THE ELBOW. SQUARE ELBOWS SHALL HAVE TURNING VANES.

C. ALL DUCTWORK EXPOSED TO VIEW SHALL BE ROUND OR OVAL SPIRAL.

2.2 DUCTWORK MATERIALS

A. COMPLY WITH SMACNA'S "HVAC DUCT CONSTRUCTION STANDARDS--METAL AND FLEXIBLE" FOR ACCEPTABLE MATERIALS, MATERIAL THICKNESS, AND DUCT CONSTRUCTIONS METHODS, UNLESS OTHERWISE INDICATED. SHEET METAL MATERIALS SHALL BE FREE OF PITTING, SEAM MARKS, ROLLER MARKS, STAINS, DISCOLORATIONS, AND OTHER IMPERFECTIONS. UNLESS STATED OTHERWISE, ALL DUCTWORK TO BE 26 GAUGE MINIMUM.

B. GALVANIZED SHEET STEEL: LOCK-FORMING QUALITY; COMPLYING WITH ASTM A 653/A 653M AND HAVING G90 (Z275) COATING DESIGNATION; DUCTS SHALL HAVE MILL-PHOSPHATIZED FINISH FOR SURFACES EXPOSED TO VIEW.

2.3 INSULATION AND LINER

A. GENERAL:
  1. FIRE- HAZARD CLASSIFICATION: MAXIMUM FLAME-SPREAD INDEX OF 25 AND SMOKE-DEVELOPED INDEX OF 50 WHEN TESTED ACCORDING TO ASTM E 84.
  2. INSULATION SCHEDULE:
    a. OUTSIDE THE BUILDING THERMAL ENVELOPE
      1) INSULATE ALL SUPPLY AND RETURN DUCTS TO R-8
    b. INSIDE THE BUILDING THERMAL ENVELOPE
      1) INSULATE SUPPLY AIR DUCTS TO R-6.
      2) INSULATE RETURN AIR DUCTS TO R-6.
      3) INSULATE OUTSIDE AIR DUCTS TO R-8 WITH CLOSED CELL INSULATION TO PREVENT CONDENSATION.

B. DUCT INSULATION: MINERAL OR GLASS FIBERS BONDED WITH A THERMOSETTING RESIN. COMPLY WITH ASTM C 553, TYPE II AND ASTM C 1290, TYPE III WITH FACTORY-APPLIED FSK JACKET.

C. FIBROUS-GLASS LINER: COMPLY WITH NFPA 90A OR NFPA 90B AND WITH NAIMA AH124.
  1. MATERIALS: ASTM C 1071; SURFACES EXPOSED TO AIRSTREAM SHALL BE COATED TO PREVENT EROSION OF GLASS FIBERS.
    a. THICKNESS: 1"
    b. LINER ADHESIVE: COMPLY WITH NFPA 90A OR NFPA 90B AND WITH ASTM C 916.
    C. MECHANICAL FASTENERS: GALVANIZED STEEL SUITABLE FOR ADHESIVE ATTACHMENT, MECHANICAL ATTACHMENT, OR WELDING ATTACHMENT TO DUCT WITHOUT DAMAGING LINER WHEN APPLIED AS RECOMMENDED BY MANUFACTURER AND WITHOUT CAUSING LEAKAGE IN DUCT.

D. FIRE-RATED INSULATION SYSTEM: HIGH-TEMPERATURE, FLEXIBLE, BLANKET INSULATION WITH FSK JACKET THAT IS UL TESTED AND CERTIFIED TO PROVIDE REQUIRED FIRE RATING.

E. REFRIGERANT PIPING INSULATION - FLEXIBLE ELASTOMERIC, MIN. 1" THICK R-6. PROTECT EXPOSED INSULATION WITH ALUMINUM JACKET.

F. SEALANT: DUCTS, AIR HANDLERS AND FILTER BOXES SHALL BE SEALED WITH AN APPROVED SEALANT. COMPLY WITH R403.3.2 OF THE IECC. SEALANT SHALL BE HERCULES MTS100 OR EQUAL.

2.4 DUCT ACCESSORIES

A. STANDARD VOLUME DAMPERS: SINGLE OR OPPOSED-BLADE DESIGN, STANDARD LEAKAGE RATING, AND SUITABLE FOR HORIZONTAL OR VERTICAL APPLICATIONS. SHAFTS TO BE FULL LENGTH, GALVANIZED STEEL, WITH ZINC-PLATED, DIE-CAST CORE WITH DIAL AND HANDLE MADE OF 3/32-INCH- THICK ZINC-PLATED STEEL, AND A 3/4-INCH HEXAGON LOCKING NUT. INCLUDE CENTER HOLE TO SUIT DAMPER OPERATING-ROD SIZE. INCLUDING ELEVATED PLATFORM FOR INSULATED DUCT MOUNTING.

B. FLEXIBLE CONNECTORS: FLAME-RETARDANT OR NONCOMBUSTIBLE FABRICS, COATINGS, AND ADHESIVES COMPLYING WITH UL 181, CLASS 1. PROVIDE HEAVY METAL EDGE BANDS, SEALED TO PREVENT LEAKAGE.
  1. INDOOR SYSTEM, FLEXIBLE CONNECTOR FABRIC: GLASS FABRIC DOUBLE COATED WITH NEOPRENE.
  2. OUTDOOR SYSTEM, FLEXIBLE CONNECTOR FABRIC: GLASS FABRIC DOUBLE COATED WITH WEATHERPROOF, SYNTHETIC RUBBER RESISTANT TO UV RAYS AND OZONE.

C. FLEXIBLE DUCTS: UL 181, CLASS 1, UL 181, CLASS 1, BLACK POLYMER FILM SUPPOSED BY HELICALLY WOUND, SPRING-STEEL WIRE; 1-1/2" FABROUS-GLASS INSULATION; POLYETHYLENE VAPOR BARRIER FILM. FLEX DUCT SHALL BE EQUAL TO CETAINTEED "CERTAFLEX" G25.

2.5 ACCESS DOORS AND PANELS

A. DUCT MOUNTED ACCESS DOORS: DOUBLE WALL, DUCT MOUNTING AND RECTANGULAR; FABRICATED OF GALVANIZED SHEET METAL WITH INSULATION FILL AND THICKNESS AS INDICATED FOR DUCT PRESSURE CLASS.
  1. FRAME: GALVANIZED SHEET STEEL, WITH BEND-OVER TABS AND FOAM GASKETS.
  2. PROVIDE NUMBER OF HINGES AND LOCKS AS FOLLOWS:
    a. LESS THAN 12 INCHES SQUARE: SECURE WITH TWO SASH LOCKS.
    b. UP TO 18 INCHES SQUARE: TWO HINGES AND TWO SASH LOCKS.
    C. UP TO 24 BY 48 INCHES: THERE HINGES AND TWO COMPRESSION LATCHES.

2.6 EQUIPMENT CURBS AND SUPPORT

A. ROOF MOUNTED EQUIPMENT: PROVIDE FACTORY CURB TO MATCH EQUIPMENT PROVIDED. CURB TO MATCH ROOF SLOPE, TYPE, AND INSULATION DEPTHS FOR PROPER EQUIPMENT MOUNTING (ACCOUNT FOR APPLICABLE ACCESSORIES SUCH AS ECONOMIZERS AND ERVS).

B. GROUND/FLOOR MOUNTED EQUIPMENT: PROVIDE CONCRETE HOUSE-KEEPING PAD AT LEAST 4" THICK AND AT LEAST 6" LARGER THAN THE EQUIPMENT BEING SUPPORTED.

PART 3 - EXECUTION

3.1 EXAMINATION

A. VERIFY FINAL LOCATIONS FOR ROUGH-INS WITH FIELD MEASUREMENTS AND WITH THE REQUIREMENTS OF THE ACTUAL EQUIPMENT TO BE CONNECTED.

B. LOCATION OF EQUIPMENT AND DEVICES, AS SHOWN ON THE DRAWINGS, ARE APPROXIMATE UNLESS DIMENSIONED; DO NOT SCALE DRAWINGS. EXACT LOCATIONS OF SUCH ITEMS SHALL BE DETERMINED BY THE ARCHITECT'S REPRESENTATIVE AND/OR DETERMINED FROM SPECIAL DETAIL AND DRAWINGS. VERIFY THE PHYSICAL DIMENSIONS OF EACH ITEM OF MECHANICAL EQUIPMENT TO FIT THE AVAILABLE SPACE AND PROMPTLY NOTIFY THE ARCHITECT PRIOR TO ROUGHING-IN IF CONFLICTS APPEAR. COORDINATION OF DIVISION 15 EQUIPMENT AND SYSTEMS TO THE AVAILABLE WIRING, EQUIPMENT, DUCTWORK, PIPING, ETC. SHALL BE THE RESPONSIBILITY OF THE CONTRACTOR. THE INSTALLATION SHALL BE CONCEALED WITHIN BUILDING CONSTRUCTION, OR EXPOSED IN MECHANICAL ROOMS, UNLESS OTHERWISE NOTED.

3.2 GENERAL INSTALLATION

A. PROVIDE ALL VALVES, DAMPERS AND CONTROL DEVICES REQUIRED TO COMPLETE BALANCING OF SYSTEMS AS DESCRIBED IN THESE DOCUMENTS OR AS NORMALLY ASSOCIATED WITH THE SYSTEMS TO BE INSTALLED WHETHER SPECIFICALLY CALLED FOR ON THE DRAWINGS, DETAILS OR SPECIFICATIONS OR NOT. IT SHALL BE UNDERSTOOD, UNLESS SPECIFICALLY STATED OTHERWISE, THAT ALL SYSTEMS INSTALLED SHALL COMPLY WITH INDUSTRY RECOGNIZED STANDARDS AND FEATURES.

B. COORDINATE MECHANICAL SYSTEMS, EQUIPMENT, AND MATERIALS INSTALLATION WITH OTHER BUILDING COMPONENTS. SEQUENCE, COORDINATE, AND INTEGRATE INSTALLATIONS OF MECHANICAL MATERIALS AND EQUIPMENT FOR EFFICIENT FLOW OF THE WORK. GIVE PARTICULAR ATTENTION TO LARGE EQUIPMENT REQUIRING POSITIONING PRIOR TO CLOSING IN THE BUILDING. GIVE RIGHT-OF-WAY PRIORITY TO SYSTEMS REQUIRED TO BE INSTALLED AT A SPECIFIED SLOPE.

C. WHERE MOUNTING HEIGHTS ARE NOT DETAILED OR DIMENSIONED, INSTALL SYSTEMS, MATERIALS, AND EQUIPMENT TO PROVIDE THE MAXIMUM HEADROOM POSSIBLE.

D. INSTALL SYSTEMS, MATERIALS, AND EQUIPMENT LEVEL AND PLUMB, PARALLEL AND PERPENDICULAR TO OTHER BUILDING SYSTEMS AND COMPONENTS, WHERE INSTALLED EXPOSED IN FINISHED SPACES.

E. INSTALL MECHANICAL EQUIPMENT TO FACILITATE SERVICING, MAINTENANCE, AND REPAIR OR REPLACEMENT OF EQUIPMENT COMPONENTS. AS MUCH AS PRACTICAL, CONNECT EQUIPMENT FOR EASE OF DISCONNECTING, WITH MINIMUM OF INTERFERENCE WITH OTHER INSTALLATIONS. EXTEND GREASE FITTINGS TO AN ACCESSIBLE LOCATION.

G. THE CONTRACTOR SHALL BE RESPONSIBLE FOR PROPERLY PROTECTING ANY PENETRATION OF A FIRE RATED ASSEMBLY. FIRE SEAL, CAULKING, AND APPURTENANCES SHALL BE UL LISTED FOR THE ASSEMBLY RATING IT IS APPLIED TO AND SHALL BE INSTALLED PER THE MANUFACTURERS WRITTEN INSTRUCTIONS. ALL SUCH MATERIALS SHALL MEET STATE, LOCAL, AND AUTHORITIES CODES AND STANDARDS.

H. PENETRATIONS ARE PROHIBITED IN ANY STRUCTURAL MEMBERS (EXCEPT WHERE NOTED IN DRAWING) WITHOUT THE WRITTEN CONSENT OF THE ARCHITECT. OBTAIN APPROVAL FOR OTHER FRAMED OPENINGS WHICH MAY BE REQUIRED IN ADDITION TO THOSE SHOWN ON DRAWINGS. PAY ALL COSTS FOR ADDITIONAL CUTTING OF HOLES AS THE RESULT OF INCORRECT LOCATION OF SLEEVES OR FURNISHING INCORRECT INFORMATION AS TO THE REQUIREMENTS OF FRAMED OPENINGS.

I. FIRE-RATED ASSEMBLY PENETRATIONS:
  1. THE CONTRACTOR SHALL BE RESPONSIBLE FOR PROPERLY PROTECTING ANY PENETRATION OF A FIRE RATED ASSEMBLY. FIRE SEAL, CAULKING, AND APPURTENANCES SHALL BE UL LISTED FOR THE ASSEMBLY RATING IT IS APPLIED TO AND SHALL BE INSTALLED PER THE MANUFACTURERS WRITTEN INSTRUCTIONS. ALL SUCH MATERIALS SHALL MEET STATE, LOCAL, AND AUTHORITIES CODES AND STANDARDS.
  2. REFER TO ARCHITECTURAL DRAWINGS FOR ALL FIRE RATED ASSEMBLY LOCATIONS AND RATINGS.

J. SEISMIC RESTRAINT:
  1. THE CONTRACTOR SHALL PROVIDE PROPER MECHANICAL SEISMIC RESTRAINTS FOR ALL INSTALLED ITEMS INCLUDING, BUT NOT LIMITED TO, DUCTS, PIPING, EQUIPMENTS AND ACCESSORIES. THE CONTRACTOR SHALL PROVIDE SEISMIC RESTRAINTS AS LISTED BY THE CODES USED BY THE AHJ OR AS SHOWN ON THE DRAWINGS (WHICHEVER IS MORE STRINGENT).

3.3 DUCT INSTALLATION

A. CONSTRUCT AND INSTALL DUCTS ACCORDING TO SMACNA'S "HVAC DUCT CONSTRUCTION STANDARDS--METAL AND FLEXIBLE."

B. INSTALL DUCTS WITH FEWEST POSSIBLE JOINTS. INSTALL FABRICATED FITTINGS FOR CHANGES IN DIRECTIONS, SIZE, AND SHAPE AND FOR CONNECTIONS.

C. COORDINATE LAYOUT WITH SUSPENDED CEILING, FIRE- AND SMOKE-CONTROL DAMPERS, LIGHTING LAYOUTS, AND SIMILAR FINISHED WORK.

D. SEAL ALL JOINTS WITH UNITED DUCT SEALANT. APPLY SEALANT TO MALE END CONNECTORS BEFORE INSERTION, AND AFTERWARD TO COVER ENTIRE JOINT AND SHEET METAL SCREWS.

E. NON-FIRE-RATED PARTITION PENETRATION: WHERE DUCTS PASS THROUGH INTERIOR PARTITIONS AND EXTERIOR WALLS AND ARE EXPOSED TO VIEW, CONCEAL SPACES BETWEEN CONSTRUCTION OPENINGS AND DUCTS OR DUCT INSULATION WITH SHEET METAL FLANGES OF SAME METAL THICKNESS AS DUCTS. OVERLAP OPENINGS ON 4 SIDES BY AT LEAST 1-1/2 INCHES.

F. PAINT INTERIORS OF METAL DUCTS, THAT DO NOT HAVE DUCT LINER, FOR 24 INCHES UPSTREAM OF REGISTERS AND GRILLS. APPLY ONE OF FLAT, BLACK, LATEX FINISH COAT OVER A COMPATIBLE GALVANIZED-STEEL PRIMER.

G. PROVIDE BALANCING DAMPERS AT POINT ON SUPPLY, RETURN, AND EXHAUST SYSTEM WHERE BRANCHES LEAD FROM LARGER DUCTS AS REQUIRED FOR AIR BALANCING. INSTALL AT A MINIMUM OF TWO DUCT WIDTHS FROM BRANCH TAKEOFF.

H. INSTALL FLEXIBLE CONNECTORS IMMEDIATELY ADJACENT TO EQUIPMENT IN DUCTS ASSOCIATED WITH FANS AND MOTORIZED EQUIPMENT SUPPORTED BY VIBRATION ISOLATORS.

I. CONNECT DIFFUSERS GRILLS TO LOW PRESSURE DUCTS WITH MAXIMUM 72-INCH LENGTH OF FLEXIBLE DUCT CLAMPED OR STRAPPED IN PLACE. CONNECT FLEXIBLE DUCTS TO METAL DUCTS WITH PANDUIT STRAPS.

J. INSTALL BACKDRAFT DAMPERS ON EXHAUST FANS OR EXHAUST DUCTS NEAREST TO OUTSIDE AND WHERE INDICATED.

3.4 HANGING AND SUPPORTING

A. SUPPORT HORIZONTAL DUCTS WITHIN 24 INCHES OF EACH ELBOW AND WITHIN 48 INCHES OF EACH BRANCH INTERSECTION.

B. SUPPORT VERTICAL DUCTS AT MAXIMUM INTERVALS OF 16 FEET AND AT EACH FLOOR.

C. SUPPORT ALL DUCTWORK, PIPING, AND EQUIPMENT AS REQUIRED BY THE LOCAL CODES, MANUFACTURES RECOMMENDATIONS, AND STANDARD INDUSTRY PRACTICE.

D. USE MATERIALS COMPATIBLE WITH ITEMS BEING SUPPORTED TO AVOID ELECTROLYTIC ACTION, AND CONFORM TO SMACNA, ANSI/ASME B31, NFPA, MSS SP-58, 69, 89.

GENERAL HVAC NOTES

(RE: ALL MECHANICAL SHEETS)

G1 THE INTENTION OF THE CONTRACT DOCUMENTS IS TO INCLUDE ALL LABOR AND MATERIALS, AND EQUIPMENT, NECESSARY, OR REASONABLY INFERABLE AS BEING NECESSARY, FOR FURNISHING, INSTALLATION AND TESTING, COMPLETE AND READY FOR SAFE OPERATION OF THE SYSTEMS DESCRIBED HEREIN.

G2 THE MECHANICAL CONTRACTOR IS RESPONSIBLE FOR T-STATS, ALL LOW VOLTAGE WIRING AND REQUIRED CONDUIT.

G3 ALL OUTSIDE AIR DUCTS TO BE EXTERNALLY INSULATED.

G4 ALL SUPPLY DUCTS AND RETURN DUCTS TO BE INSULATED AND INTERNALLY LINED AS SHOWN ON DRAWING AND SPECIFICATIONS.

G5 DUCTWORK LAYOUT IS PARTIALLY DIAGRAMMATIC, OFFSETS AND ADJUSTMENTS MAY BE REQUIRED TO COORDINATE WITH LIGHTS, DUCTS, PLUMBING AND STRUCTURE.

G6 CONTRACTOR SHALL IDENTIFY ALL SERVICEABLE ITEMS (VALVES, DAMPERS, COILS, ETC.) SO THAT THE CEILING SUBCONTRACTOR MAY KNOW WHERE TO INSTALL ACCESS-TYPE PANELS SHOULD A LIFT-UP TYPE CEILING NOT BE INSTALLED. ARCHITECT SHALL APPROVE LOCATIONS OF ACCESS PANELS PRIOR TO INSTALLATION.

G7 ALL PENETRATIONS MADE THROUGH RATED ASSEMBLIES TO ACCOMMODATE WORK OF THIS SECTION, MUST BE SEALED TO MAINTAIN THE RATING OF SUCH ASSEMBLY BY A U.L RECOGNIZED SEALING METHOD.

G8 CONTRACTOR HAS SOLE RESPONSIBILITY TO COORDINATE ANY SUBSTITUTIONS WITH ALL OTHER DISCIPLINES, EQUIPMENT OF GREATER POWER, DIMENSION, CAPACITIES, AND RATINGS MAY BE FURNISHED PROVIDED SUCH PROPOSED EQUIPMENT HAS BEEN SUBMITTED FOR REVIEW, IN WRITING AND CONNECTING MECHANICAL AND ELECTRICAL SERVICES, CIRCUIT BREAKERS, CONDUIT, MOTORS, BASES, AND EQUIPMENT SPACES ARE ADJUSTED APPROPRIATELY. NO ADDITIONAL COSTS WILL BE APPROVED FOR THESE INCREASES, IF LARGER EQUIPMENT IS PROPOSED. IF MINIMUM ENERGY RATINGS OR EFFICIENCIES OF THE EQUIPMENT ARE SPECIFIED, THE EQUIPMENT MUST MEET THE DESIGN REQUIREMENTS AND COMMISSIONING REQUIREMENTS, CONTRACTOR IS SOLELY RESPONSIBLE FOR SUBSTITUTED EQUIPMENT MEETING THE INTENT OF THE ORIGINAL DESIGNED EQUIPMENT IN ALL ASPECTS.

MECHANICAL LEGEND

EQUIPMENT

- FLEXIBLE DUCTWORK
- LINED DUCTWORK
- DEMO
- T THERMOSTAT
- TS TEMPERATURE SENSOR
- SD SMOKE DETECTOR
- CO2 CO2 SENSOR
- M MOTORIZED DAMPER
- B BAROMETRIC DAMPER
- MANUAL VOLUME DAMPER
- FSD COMBINATION SMOKE/FIRE DAMPER
- FD FIRE DAMPER
- # / # EQUIPMENT CALLOUT
- # / ## DETAIL CALLOUT
- T TEMPERATURE GAUGE
- POINT OF CONNECTION
- INTAKE OR EXHAUST
- DIRECTION OF AIRFLOW
- SUPPLY DIFFUSER
- RETURN GRILLE
- EXHAUST GRILLE
- ROUND DUCTWORK BREAK
- DUCTWORK BREAK
- DUCTWORK RISE
- DUCTWORK DROP
- FLOW — SPIN-IN SUPPLY (WITH VOLUME DAMPER)
- SPIN-IN RETURN/EXHAUST (WITH VOLUME DAMPER)
- SA RA — 45° SQUARE DUCT TAKE-OFF FROM SQUARE DUCT
- SA RA — 45° ROUND DUCT TAKE-OFF FROM SQUARE DUCT
- SA RA — 45° ROUND DUCT TAKE-OFF FROM ROUND DUCT
- TURNING VANE
- MITERED CORNER
- RADIUS ELBOW

ABBREVIATIONS & DESCRIPTIONS

CFF	CAP FOR FUTURE
CFM	CUBIC FEET PER MINUTE
EER	ENERGY EFFICIENCY RATIO
ESP	EXTERNAL STATIC PRESSURE
EWT	ENTERING WATER TEMPERATURE
FCO	FLOOR CLEANOUT
HP	HORSEPOWER
IECC	INTERNATIONAL ENERGY CONSERVATION CODE
HVAC	HEATING, VENTILATING, AIR CONDITIONING
MCA	MINIMUM CIRCUIT AMPS
MOCP	MAXIMUM OVERCURRENT PROTECTION
OSA	OUTSIDE AIR
PH	PHASE
RA	RETURN AIR
RTU	ROOFTOP UNIT
SA	SUPPLY AIR
SEER	SEASONAL ENERGY EFFICIENCY RATIO
VTR	VENT THROUGH ROOF
V	VOLTS
WB	WET BULB
W/	WITH

SHEET INDEX

M0.1 - MECHANICAL SPECIFICATIONS
M1.1 - MECHANICAL FLOOR PLAN
M3.1 - MECHANICAL ISOMECTRIC VIEW
M5.1 - MECHANICAL DETAILS
M6.1 - MECHANICAL SCHEDULE

REVIEWED FOR CODE COMPLIANCE 11/08/2022

COLORADO LICENSED PROFESSIONAL ENGINEER STEVE T ALSCHULER 0042034
6/17/2022

INDOOR ENVIRONMENTS USA
A LIMITED LIABILITY COMPANY
1920 13th STREET, SUITE B1
BOULDER, CO80302
720 742-1587

NOTICE: DUTY OF COOPERATION

Release of these plans contemplates further cooperation among the owner, his contractor and the architect. Design and construction are complex. Although the architect and his consultants have performed their services with due care and diligence, they cannot guarantee perfection. Communication is imperfect and every contingency cannot be anticipated. Any ambiguity or discrepancy discovered by the use of these plans shall be reported immediately to the architect. Failure to notify the architect compounds misunderstanding and increases construction costs. A failure to cooperate by a simple notice to the architect shall relieve the architect from responsibility for the consequences. Changes made from the plans without consent of the architect are unauthorized and shall relieve the architect of responsibility for all consequences arriving out of such changes.

All design, documents and data prepared by Eric Smith Associates, P.C. as instruments of service shall remain property of Eric Smith Associates, P.C. and shall not be copied, changed or disclosed in any form whatsoever without first obtaining the express written consent of Eric Smith Associates, P.C.

© Eric Smith Associates, P.C.

REVISIONS

No.	Description	Date

uchealth

YVMC MOUNTAIN CLINIC
2305 MOUNTER WERNER CIRCLE'
SUITE P.027
STEAMBOAT SPRINGS, COLORADO

ERIC SMITH ASSOCIATES, P.C.
1919 SEVENTH STREET
BOULDER, COLORADO, 80302
(303) 442-5458, (303) 442-4745 FAX

Job Number:	-
Date:	6/20/22
Drawn By:	RM
Checked By:	DM

Project Phase
Project Status

Sheet Title
SPECIFICATIONS,GENERAL NOTES & LEGEND

Sheet Number
M0.1

GENERAL NOTES:

A. REFER TO SHEET M0.1 FOR GENERAL NOTES, SPECIFICATIONS AND LEGEND.

B. REFER TO SHEET M5.1 FOR MECHANICAL DETAILS.

C. REFER TO SHEET M6.1 FOR MECHANICAL SCHEDULE.

D. DUCTWORK SHOULD BE RIGID METAL WHERE POSSIBLE

E. EQUIPMENT EXISTING TO REMAIN. RELOCATE TEMPERATURE SENSOR TO LOCATION INDICATED.

F. EQUIPMENT EXISTING TO REMAIN.

KEYED NOTES:

1. TRANSITION FROM EXISTING FAN COIL UNIT TO NEW DUCTWORK. OBSERVE NOMINAL DIMENSIONS.
2. ROUTE EXISTING 200 CFM OSA FROM VAV BOX TO RETURN OF FAN COIL.
3. REROUTE HFCU CONDENSATION TO APPROVED DRAIN.
4. ROUTE EXHAUST TO EXISTING EAV. SET EAV TO EXHAUST AN ADDITIONAL 80 CFM.
5. RELOCATE SPACE TEMPERATURE SENSOR TO THIS LOCATION.

REVIEWED FOR CODE COMPLIANCE
11/08/2022

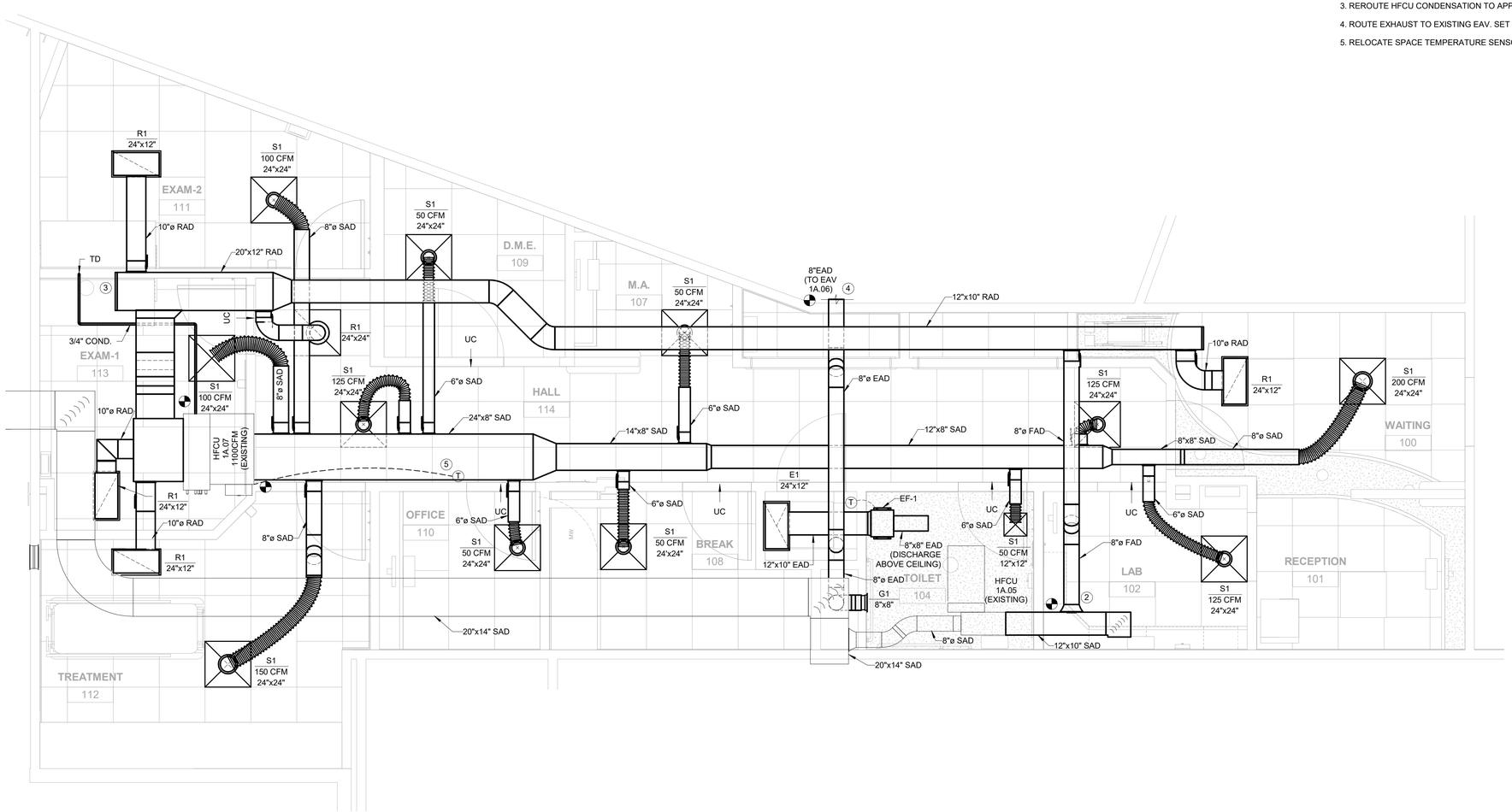

1 MECHANICAL FLOOR PLAN
3/8" = 1'-0"

OUTSIDE AIR VENTILATION CALCULATIONS

ZONE	OCCUPANT CLASSIFICATION	ZONE AREA (FT^2)	OCCUPANT DENSITY #/1000 FT^2	PEOPLE OSA FLOW RATE CFM/PERSON	AREA OSA RATE (CFM/FT^2)	OCCUPANT DENCITY	PEOPLE OSA FLOW RATE (CFM)	AREA OSA FLOW (CFM)	REQUIRED OSA
TREATMENT/EXAM ROOMS	OFFICE SPACE	865	10	5	0.06	8.65	43.25	51.9	95
RECEPTION	RECEPTION AREAS	165	30	5	0.06	4.95	24.75	9.9	35
BREAK ROOM	GENERAL/BREAK ROOMS	70	50	5	0.12	3.5	17.5	8.4	26
TABLE 403.3.1.1 IMC 2018							TOTAL OSA REQUIRED		156

COLORADO LICENSED
STEVE T. ALSCHULER
0042034
PROFESSIONAL ENGINEER
6/17/2022

INDOOR ENVIRONMENTS USA
A LIMITED LIABILITY COMPANY
1920 13th STREET, SUITE B1
BOULDER, CO80302
720 742-1587

NOTICE: DUTY OF COOPERATION
Release of these plans contemplates further cooperation among the owner, his contractor and the architect. Design and construction are complex. Although the architect and his consultants have performed their services with due care and diligence, they cannot guarantee perfection. Communication is imperfect and every contingency cannot be anticipated. Any ambiguity or discrepancy discovered by the use of these plans shall be reported immediately to the architect. Failure to notify the architect compounds misunderstanding and increases construction costs. A failure to cooperate by a simple notice to the architect shall relieve the architect from responsibility for the consequences. Changes made from the plans without consent of the architect are unauthorized and shall relieve the architect of responsibility for all consequences arriving out of such changes.

All design, documents and data prepared by Eric Smith Associates, P.C. as instruments of service shall remain property of Eric Smith Associates, P.C. and shall not be copied, changed or disclosed in any form whatsoever without first obtaining the express written consent of Eric Smith Associates, P.C.

© Eric Smith Associates, P.C.

REVISIONS

No.	Description	Date

uchealth

YVMC MOUNTAIN CLINIC
2305 MOUNTER WERNER CIRCLE'
SUITE P.027
STEAMBOAT SPRINGS, COLORADO

ERIC SMITH ASSOCIATES, P.C.
1919 SEVENTH STREET
BOULDER, COLORADO, 80302
(303) 442-5458; (303) 442-4745 FAX

Job Number:	-
Date:	6/20/22
Drawn By:	RM
Checked By:	DM

Project Phase
Project Status

Sheet Title
MACHANICAL PLAN

Sheet Number
M1.1

REVIEWED FOR CODE COMPLIANCE
11/08/2022

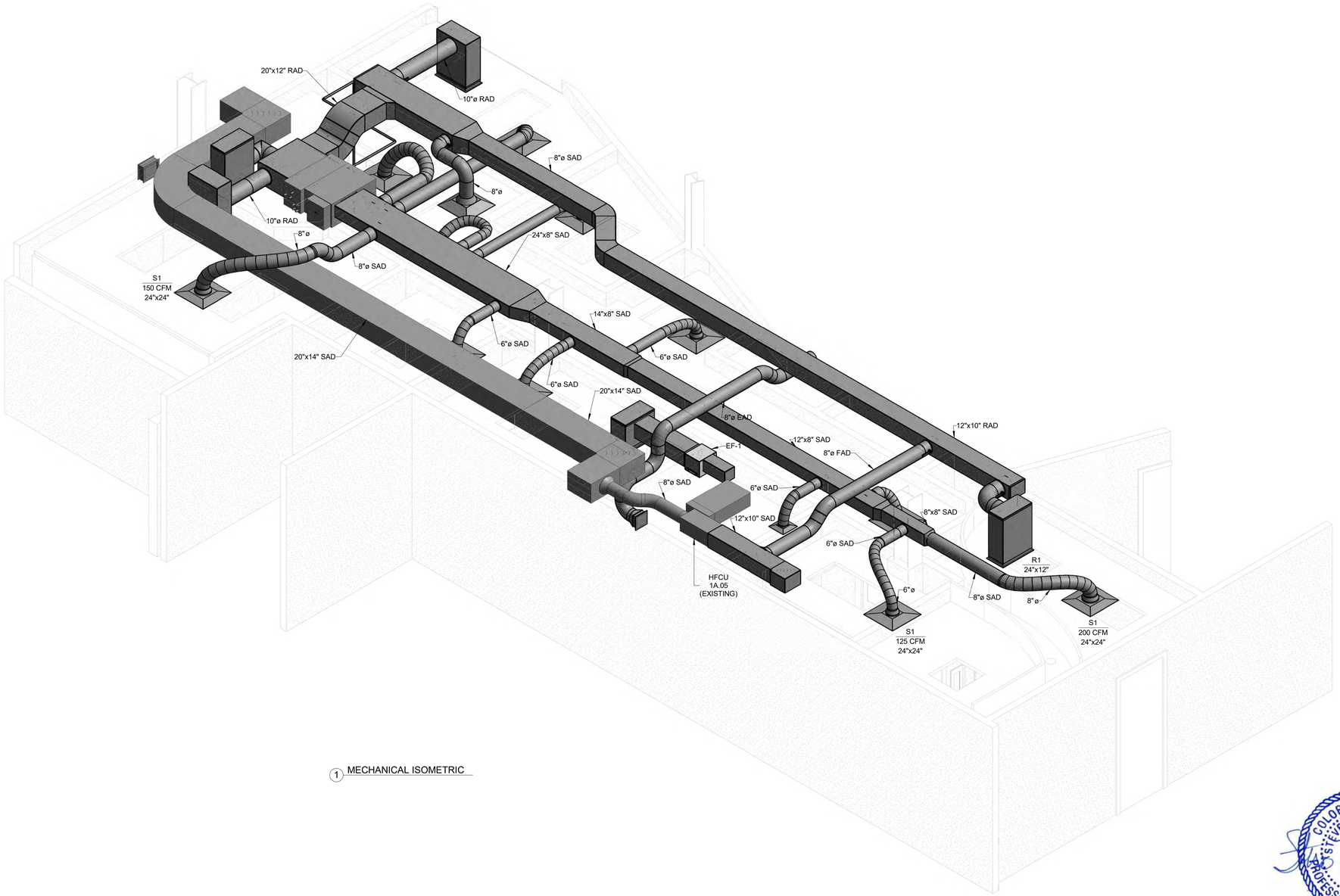

1 MECHANICAL ISOMETRIC

COLORADO LICENSED
STEVE T. ALSCHULER
00420344
PROFESSIONAL ENGINEER
6/17/2022

INDOOR ENVIRONMENTS USA
A LIMITED LIABILITY COMPANY

1920 13th STREET, SUITE B1
BOULDER, CO80302
720 742-1587

NOTICE: DUTY OF COOPERATION

Release of these plans contemplates further cooperation among the owner, his contractor and the architect. Design and construction are complex. Although the architect and his consultants have performed their services with due care and diligence, they cannot guarantee perfection. Communication is imperfect and every contingency cannot be anticipated. Any ambiguity or discrepancy discovered by the use of these plans shall be reported immediately to the architect. Failure to notify the architect compounds misunderstanding and increases construction costs. A failure to cooperate by a simple notice to the architect shall relieve the architect from responsibility for the consequences. Changes made from the plans without consent of the architect are unauthorized and shall relieve the architect of responsibility for all consequences arriving out of such changes.

All design, documents and data prepared by Eric Smith Associates, P.C. as instruments of service shall remain property of Eric Smith Associates, P.C. and shall not be copied, changed or disclosed in any form whatsoever without first obtaining the express written consent of Eric Smith Associates, P.C.

© Eric Smith Associates, P.C.

REVISIONS

No.	Description	Date

uchealth

YVMC MOUNTAIN CLINIC

2305 MOUNTER WERNER CIRCLE'
SUITE P.027
STEAMBOAT SPRINGS, COLORADO

ERIC SMITH ASSOCIATES, P.C.
1919 SEVENTH STREET
BOULDER, COLORADO, 80302
(303) 442-5458, (303) 442-4745 FAX

Job Number:	-
Date:	6/20/22
Drawn By:	RM
Checked By:	DM

Project Phase
Project Status

Sheet Title
MECHANICAL ISOMETRIC VIEW

Sheet Number
M3.1

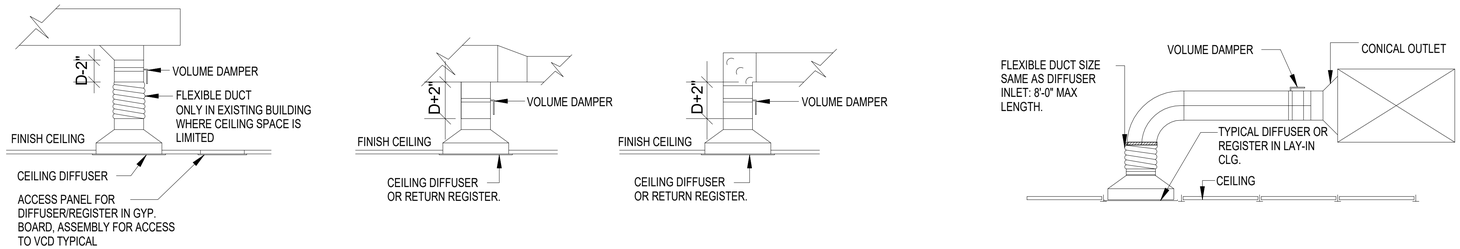

1 TYPICAL VOLUME DAMPER, DIFFUSER, GRILL, REGISTER AND/OR FLEX DUCT CONN. DETAIL

N.T.S

NOTE:
HANGERS MUST NOT DEFORM DUCT SHAPE.

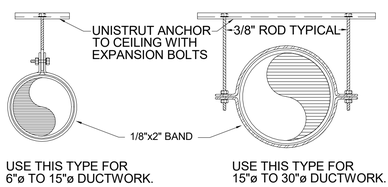

NOTE:
ALL HANGER BANDS SHALL BE THE SAME MATERIAL AS THE DUCTWORK THE BAND IS USED ON.

2 CIRCULAR DUCT SUPPORT DETAIL

N.T.S

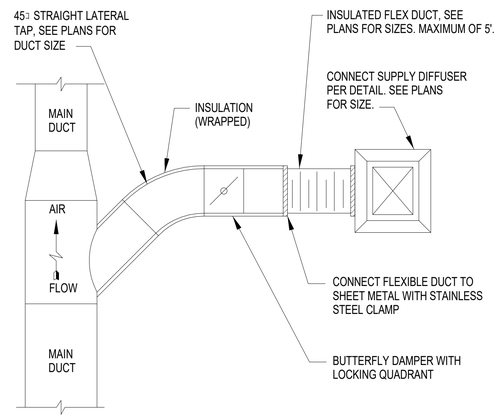

3 ROUND DUCT TAKEOFF DETAIL

N.T.S

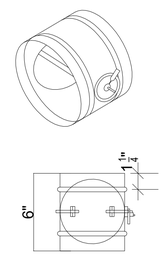

NOTE:

1. 22 GAUGE GALVANIZED STEEL FRAME, 6" LONG STANDARD.DOUBLE BEADED FOR STRENGTH.
2. 22 GAUGE GALVANIZED STEEL BLADE WITH CENTER "V" BREAK FOR ADDED STRENGTH.
3. 3/8" SQUARE ZINC PLATED STEEL BLADE SHAFTS WITH TIGHT SEALING NYLON BUSHINGS.
4. ALL STEEL PARTS WITH GALVANIZED FINISH OR ZINC PLATING.
5. MAXIMUM OPERATING TEMPERATURE IS 250° F.
6. MANUAL LOCKING QUADRANT SUPPLIED FACTORY MOUNTED TO DAMPER SLEEVE.
7. MAXIMUM DIAMETER 24", MINIMUM DIAMETER 4".
8. DAMPERS ARE SUPPLIED APPROXIMATELY $\frac{1}{8}$" UNDER NOMINAL DIAMETER.

4 ROUND MANUAL BALANCING DAMPER

NTS

COLORADO LICENSED
STEVE T. ALSCHULER
0042034
PROFESSIONAL ENGINEER
6/17/2022

REVIEWED FOR CODE COMPLIANCE
11/08/2022

INDOOR ENVIRONMENTS USA
A LIMITED LIABILITY COMPANY
1920 13th STREET, SUITE B1
BOULDER, CO80302
720 742-1587

NOTICE: DUTY OF COOPERATION
Release of these plans contemplates further cooperation among the owner, his contractor and the architect. Design and construction are complex. Although the architect and his consultants have performed their services with due care and diligence, they cannot guarantee perfection. Communication is imperfect and every contingency cannot be anticipated. Any ambiguity or discrepancy discovered by the use of these plans shall be reported immediately to the architect. Failure to notify the architect compounds misunderstanding and increases construction costs. A failure to cooperate by a simple notice to the architect shall relieve the architect from responsibility for the consequences. Changes made from the plans without consent of the architect are unauthorized and shall relieve the architect of responsibility for all consequences arriving out of such changes.

All design, documents and data prepared by Eric Smith Associates, P.C. as instruments of service shall remain property of Eric Smith Associates, P.C. and shall not be copied, changed or disclosed in any form whatsoever without first obtaining the express written consent of Eric Smith Associates, P.C.

© Eric Smith Associates, P.C.

REVISIONS

No.	Description	Date

uchealth

YVMC MOUNTAIN CLINIC
2305 MOUNTER WERNER CIRCLE'
SUITE P.027
STEAMBOAT SPRINGS, COLORADO

ERIC SMITH ASSOCIATES, P.C.
1919 SEVENTH STREET
BOULDER, COLORADO, 80302
(303) 442-5458, (303) 442-4745 FAX

Job Number:	-
Date:	6/20/22
Drawn By:	RM
Checked By:	DM

Project Phase
Project Status

Sheet Title
MECHANCIAL DETAILS

Sheet Number
M5.1

REVIEWED FOR CODE COMPLIANCE
11/08/2022

EXISTING HORIZONTAL FAN COIL SCHEDULE (HYDRONIC)

CODE (HFCU)	MANUFACTURER/ MODEL NO.	AREA SERVED	FAN		COOLING COIL								HEATING COIL						ELECTRICAL							NOTES
			SUPPLY CFM	ESP (IN.)	EAT (°F) DB	EAT (°F) WB	TOTAL MBH	SENS MBH	MAX LAT(°F)	GPM	ROW	WPD (FT)	EAT (°F)	MBH	MIN LAT(°F)	GPM	ROW	WPD (FT)	HP	VOLT	PH	FLA	DISCON.	FEEDER	FUSE	
1A.07	ENGINEERED COMFORT/D35FHZW-16	UCHEALTH	1100	0.3	75	62	25.7	19.7	55	5.4	5	2.7	65	19.6	85	2.2	1	2.5	1/4	120	1	7.2	$.T.O	(2#12, #12G) 3/4"C	-	A

GENERAL NOTES:

1. CHILLED WATER: EWT = 44°F , LWT = 54°F , 30% PROPYLENE GLYCOL.
2. HEATING WATER: EWT = 150°F , LWT = 130°F , 30% PROPYLENE GLYCOL..
3. PROVIDE 2" MERV 8 THRPW AWAY FILTERS.
4. SCHEDULED FAN VALUES (CFM, SP AND HP) ARE ACTUAL AT ALTITUDE. MOTOR HP HAS BEEN ADJUSTED FROM SEA LEVEL CONDITIONS FOR OPERATION AT JOB SITE ELEVATION. JOB SITE ELEVATION = 6700 FT.
5. PROVIDE PREMIUM EFFICIENCY MOTORS FOR MOTORS 1 HP AND OVER PER MENA STANDARD MG1-2003, TABLES 12-12 AND 12-13.
6. PROVIDE CONDENSATE PUMP POWERED FROM EQUIPMENT . PUMP SHALL BE PROVIDED WITH VOLTAGE MATCHING FAN COIL UNIT . IF TRANSFORMER IS PROVIDED FOR CONDENSATE PUMP OPERATION, PROVIDE LINE ITEM COST. GRAVITY DRAINAGE ACCEPTABLE WHERE POSSIBLE.
7. DESIGN OUTSIDE AIR CONDITIONS:

   COOLING: 88F dB/56.2F wB
   HEATING: -10F dB

NOTES:

A. EQUIPMENT EXISTING AND WILL REMAIN.

EXISTING VAV BOX SCHEDULE

CODE (VAV)	AREA SERVED	MANUFACTURER/ MODEL NO.	DESIGN CFM		CAPACITY (CFM)		MAX. NC @ DESIGN MAX.	INLET SIZE	OUTLET SIZE	NOTES
			AIRFLOW (CFM)	DESIGN (CFM)	MAX.	MIN.				
1A.05	UC HEALTH + SKI PATROL	TITUS DESV 8	605	320	900	145	-	8	12 x 10	A

GENERAL NOTES:

1. MOUNT WITH 5 STRAIGHT DUCT DIAMETERS UPSTREAM OF THE BOX.
2. MAXIMUM OUTLET S.P. = 0.75".
3. MAXIMUM NC LEVELS ARE RADIATED SOUND DATA AND BASED ON THE MAXIMUM BOX CFM LISTED AND AT A PRESSURE DROP ACROSS THE BOX OF 2.0".
4. JOBSITE ELEVATION = 6700 FT.

NOTES:

EQUIPMENT EXISTING AND WILL REMAIN.

AIR DISTRIBUTION DEVICE SCHEDULE

MARK	DESCRIPTION	MOUNTING	MANUFACTURER AND MODEL#	SIZE	MATERIAL	FINISH	NOTES
S1	CEILING DIFFUSER	SURFACE MOUNT	METALAIRE 5750	SEE PLANS	ALUMINUM	COORDINATE WITH ARCHITECT	1 & 2
R1	RETURN GRILLE	SURFACE MOUNT	METALAIRE CC45	SEE PLANS	ALUMINUM	COORDINATE WITH ARCHITECT	1 & 2
E1	EXHAUST GRILLE	SURFACE MOUNT	METALAIRE CC45	SEE PLANS	ALUMINUM	COORDINATE WITH ARCHITECT	1 & 2
G1	RETURN GRILLE	SURFACE MOUNT	METALAIRE 4000	8"x8"	ALUMINUM	COORDINATE WITH ARCHITECT	2

NOTES:

1. PROVIDE APPROPRIATE MOUNTING FRAME WITH CEILING TYPE.
2. PROVIDE BALANCING DAMPER FOR EACH DIFFUSER AND GRILLE.

EXHAUST FAN SCHEDULE

SYMBOL	BRAND	MODEL	TYPE	SERVICE	CFM	E.S.P. (I.N. W.C.)	FAN (RPM)	ELECTRICAL				WATTS	WEIGHT (LBS)	NOTES
								VOLTS	PHASE	HZ	AMPS			
EF-1	GREENHECK	CSP-A200-QD	INLINE CABINET FAN	EMC ROOM	80	0.25	1182	120	1	60	0.43	16.4	23	1

NOTES:

1. PROVIDE WITH COOLING ONLY THERMOSTAT. SET TO 75 DEGREES.
2. FURNISH FANS WITH BACKDRAFT DAMPERS.
3. FURNISH ALL FANS WITH THERMAL OVERLOAD PROTECTION AND FACTORY INSTALLED DISCONNECT.

COLORADO LICENSED STEVE T ALSCHULER 0042034 PROFESSIONAL ENGINEER
6/17/2022

INDOOR ENVIRONMENTS USA
A LIMITED LIABILITY COMPANY
1920 13th STREET, SUITE B1
BOULDER, CO80302
720 742-1587

NOTICE: DUTY OF COOPERATION

Release of these plans contemplates further cooperation among the owner, his contractor and the architect. Design and construction are complex. Although the architect and his consultants have performed their services with due care and diligence, they cannot guarantee perfection. Communication is imperfect and every contingency cannot be anticipated. Any ambiguity or discrepancy discovered by the use of these plans shall be reported immediately to the architect. Failure to notify the architect compounds misunderstanding and increases construction costs. A failure to cooperate by a simple notice to the architect shall relieve the architect from responsibility for the consequences. Changes made from the plans without consent of the architect are unauthorized and shall relieve the architect of responsibility for all consequences arriving out of such changes.

All design, documents and data prepared by Eric Smith Associates, P.C. as instruments of service shall remain property of Eric Smith Associates, P.C. and shall not be copied, changed or disclosed in any form whatsoever without first obtaining the express written consent of Eric Smith Associates, P.C.

© Eric Smith Associates, P.C.

REVISIONS

No.	Description	Date

uchealth

YVMC MOUNTAIN CLINIC
2305 MOUNTER WERNER CIRCLE'
SUITE P.027
STEAMBOAT SPRINGS, COLORADO

ESA
ERIC SMITH ASSOCIATES, P.C.
1919 SEVENTH STREET
BOULDER, COLORADO, 80302
(303) 442-5458, (303) 442-4745 FAX

Job Number:	-
Date:	6/20/22
Drawn By:	RM
Checked By:	DM

Project Phase
Project Status

Sheet Title
MECHANCIAL SCHEDULE

Sheet Number
M6.1

PLUMBING SPECIFICATIONS

PART 1 - GENERAL
1.1 GENERAL INTENT

A. THE INTENTION OF THE CONTRACT DOCUMENTS IS TO INCLUDE ALL LABOR AND MATERIALS, AND EQUIPMENT, NECESSARY , OR REASONABLY INFERABLE AS BEING NECESSARY, FOR FURNISHING, INSTALLATION AND TESTING, COMPLETE AND READY FOR SAFE OPERATION OF THE SYSTEMS DESCRIBED HEREIN.
B. SUBMISSION OF A PROPOSAL SHALL BE CONSTRUED AS EVIDENCE THAT THE CONTRACTOR HAS MADE A THOROUGH EXAMINATION OF THE SITE, AND ALL EXISTING CONDITION AND LIMITATIONS WHICH AFFECT THIS WORK. LATER CLAIMS SHALL NOT BE MADE FOR LABOR, EQUIPMENT OR MATERIALS REQUIRED BECAUSE OF DIFFICULTIES ENCOUNTERED, WHICH COULD HAVE BEEN FORESEEN DURING SUCH AN EXAMINATION.
C. THE DRAWINGS INDICATE DIAGRAMMATICALLY THE EXTENT, GENERAL CHARACTER, AND LOCATION OF THE WORK TO BE PERFORMED. WHERE MINOR ADJUSTMENT OF THE WORK ARE NECESSARY FOR PURPOSES OF FABRICATION OR INSTALLATION OF ITEMS, THE CONTRACTOR SHALL MAKE SUCH ADJUSTMENT WITH NO ADDED COMPENSATION. WHERE SUCH ADJUSTMENTS AFFECT FUNCTIONAL OR AESTHETIC DESIGN OF THE WORK, THEY SHALL FIRST BE SUBMITTED TO THE ARCHITECT FOR REVIEW AND APPROVAL.
D. SITE UTILITIES: THE MECHANICAL DOCUMENTS INDICATE CONNECTION LOCATION OF VARIOUS BUILDING SERVICES.COORDINATE WORK WITH THE SITE UTILITIES CONTRACTOR TO ENSURE PROPER INVERT ELEVATION, PIPE SLOPE GRADIENT, PIPE SIZE AND SEPARATION WITHIN TRENCH WORK. NOTIFY ARCHITECT OR ENGINEER OF ANY DISCREPANCY BETWEEN DRAWINGS AND FIELD CONDITIONS.
E. COMPLY WITH ALL LOCAL AND STATE CODES REGARDING SEISMIC SUPPORT AND ISOLATION. NOT ALL SEISMIC REQUIREMENTS ARE SHOWN ON THESE DRAWING. CONTRACTOR SHALL MEET THE REQUIREMENTS OF THE AUTHORITY HAVING JURISDICTION FOR SEISMIC SUPPORT/ISOLATION OF HIS WORK.

1.2 GENERAL COORDINATION

A. THE CONTRACTOR IS RESPONSIBLE FOR INSTALLATION OF A SATISFACTORY, COMPLETE, FULLY OPERATIONAL PIECE OF WORK IN ACCORDANCE WITH TRUE INTENT OF THE DRAWINGS AND SPECIFICATIONS.
B. CONTRACTOR SHALL CONSULT ALL DRAWINGS FOR THE PROJECT TO DETERMINE THAT THE WORK AND EQUIPMENT WILL FIT AS PLANNED.
C. THE LOCATION OF PIPING, DUCTS, EQUIPMENTS, ETC, SHALL BE CHECKED TO EN CLEARANCE FROM OPENINGS, STRUCTURAL MEMBERS, CABINETS, LIGHTS, OUTLETS AND EQUIPMENT HAVING FIXED LOCATIONS.THIS SHALL BE ACCOMPLISHED PRIOR TO FABRICATION OF PIPE OR DUCTS.
D. IF, AT ANY TIME, AND IN ANY CASE, CHANGES IN LOCATION OF PIPING, DUCTS, EQUIPMENT, ETC., BECOMES NECESSARY DUE TO EXISTING OBSTACLES OR INSTALLATION OF OTHER TRADES SHOWN ON ANY OF THE PROJECT DRAWINGS AND SUCH CONFLICT COULD HAVE BEEN AVOIDED BY PROPER COORDINATION BETWEEN TRADES OR PROPER PRE-PLANNING OF WORK, SUCH REQUIRED CHANGES SHALL BE MADE BY THE CONTRACTOR AT NO EXTRA COST. THESE CHANGES ARE TO BE RECORDED ON THE RECORD DRAWINGS.
E. THIS CONTRACTOR IS RESPONSIBLE TO PROVIDE ALL INCIDENTAL ELECTRICAL INTERCONNECTIONS, CONTROL WIRING, ETC., WHICH ARE NECESSARY FOR SYSTEM COMPLETION AND WHICH ARE NOT SPECIFICALLY SHOWN OR OTHERWISE INDICATE ON THE ELECTRICAL DRAWINGS OR SPECIFIED IN DIVISION 26.
F. ALL ELECTRICAL WORK INCIDENTAL TO OR ACCOMPLISHED UNDER THIS DIVISION SHALL COMPLY WITH ALL REQUIREMENTS OF DIVISION 26.
G. PLANS ARE DIAGRAMMATIC IN NATURE. CONTRACTOR IS RESPONSIBLE FOR REFERRING TO THE DIVISION DOCUMENTS FOR ALL OTHER DISCIPLINES FOR PROJECT CONSTRUCTION AND OTHER DETAILS WHICH AFFECT THE MECHANICAL INSTALLATION. CONTRACTOR SHALL CONFER WITH ALL OTHER TRADES FOR FINISHING ADJACENT TO ITS WORK AND ARRANGE TO HAVE VISIBLE PORTIONS OF THIS WORK (SUCH AS ACCESS DOORS, VALVES, SPRINKLER HEADS, ESCUTCHEONS, ETC.) MERGE WITH THE FINISH IN A MANNER SATISFACTORY TO THE ARCHITECT.
H. CONTRACTOR SHALL IDENTIFY ALL SERVICEABLE ITEMS (VALVES, CLEANOUTS, COILS, ETC.) SO THAT THE CEILING SUBCONTRACTOR MAY KNOW WHERE TO INSTALL ACCESS-TYPE PANELS SHOULD A LIFT-UP TYPE CEILING NOT BE INSTALLED. THIS CONTRACTOR SHALL PROVIDE ACCESS PANELS FOR HIS WORK UNLESS SPECIFICALLY NOTED ON THE DRAWINGS. ARCHITECT SHALL APPROVE LOCATIONS OF ACCESS PANELS PRIOR TO INSTALLATION.
I. CEILING HEIGHTS: ARCHITECTURAL DRAWINGS SHALL BE CHECKED FOR CEILING HEIGHTS, WALLS, AND CABINETS THAT ARE INTENDED TO CONCEAL WORK OF THIS SECTION. WHERE CONFLICTS OCCUR, THE ARCHITECT SHALL BE NOTIFIED PRIOR TO INSTALL OF THE WORK. LOCATION OF EXPOSED WORK SUCH AS PIPING, VALVES, SPEAKERS, SPRINKLER HEADS TAKE PRECEDENCE OVER CONCEALED WORK.
J. CONTRACTOR SHALL EXERCISE CARE TO MINIMIZE ANY DISTURBANCE TO ADJACENT AREA OF THE BUILDING WHICH ARE TO REMAIN IN OPERATION. ISOLATE WORK AREAS BY TEMPORARY PARTITIONS, TARPS, ETC., TO KEEP DUST AND DIRT IN THE CONSTRUCTION AREA.
K. PROVIDE ALL NECESSARY FLASHING, SEALING, ETC., TO MAINTAIN THE WATERPROOF INTEGRITY OF THE BUILDING AS REQUIRED BY THE INSTALLATION OR REMOVAL OF ITEMS AS REQUIRED BY THIS SCOPE OF WORK.
L. INSTALL ALL WORK OF THIS SCOPE TO BE READILY ACCESSIBLE FOR OPERATION, MAINTENANCE, AND REPAIR. MINOR DEVIATION FROM THE DRAWING MAY BE MADE TO ACCOMPLISH THIS, BUT CHANGES INVOLVING OTHER TRADES MAY NOT BE MADE WITHOUT PRIOR APPROVAL.
M. ALL PENETRATIONS MADE THROUGH RATED ASSEMBLIES TO ACCOMMODATE WORK OF THIS SECTION, MUST BE SEALED TO MAINTAIN THE RATING OF SUCH ASSEMBLY BY A U.L. RECOGNIZED SEALING METHOD.
N. PROVIDE ALL CUTTING AND PATCHING REQUIRED FOR INSTALLATION OF THIS WORK. COORDINATE ALL BLOCKING, SUPPORT, ETC., NECESSARY FOR THE INSTALLATION OF THIS WORK WITH THE GENERAL CONTRACTOR.

1.3 CODES, STANDARDS, PERMITS, AND FEES

A. ALL APPLICABLE CODES LAWS AND REGULATIONS GOVERNING OR RELATING TO ANY PORTION OF THIS WORK ARE HEREBY INCORPORATED INTO AND MADE A PART OF THESE SPECIFICATIONS. THEIR PROVISIONS SHALL BE CARRIED OUT BY THE CONTRACTOR, WHO SHALL INFORM THE ARCHITECT IN WRITING PRIOR TO SUBMITTING A BID, OF ANY WORK OR MATERIALS WHICH VIOLATE ANY OF THE ENFORCED LAW, ORDINANCES, RULES AND REGULATIONS, HE SHALL ASSUME FULL RESPONSIBILITY, AND SHALL BEAR ALL COSTS ASSOCIATED WITH BRINGING WORK INTO COMPLIANCE.
B. WHERE DRAWINGS AND SPECIFICATIONS CALL FOR MATERIAL OR CONSTRUCTION OF A BETTER QUALITY OR HIGHER CAPACITY THEN REQUIRED BY THE ABOVE-MENTIONED CODES AND STANDARDS, THE PROVISIONS OF THE DRAWINGS OR SPECIFICATIONS SHALL TAKE PRECEDENCE OVER THE REQUIREMENTS OF THE CODES AND STANDARDS.
C. THE RESPECTIVE SUB-CONTRACTOR, AT HIS EXPENSE, SHALL OBTAIN ALL PERMITS AND FEES REQUIRED FOR THIS SCOPE OF WORK ON THIS PROJECT. THE SUB-CONTRACTORS SHALL ALSO SCHEDULE ALL REQUIRED INSPECTION AND OBTAIN CERTIFICATES FOR HIS WORK, AT HIS EXPENSE.

1.4 SUBMITTALS AND SUBSTITUTIONS

A. SUBMITTAL MATERIALS SHALL BE COMPLETE IN EVERY RESPECT AND SHALL CLEARLY INDICATE EQUIPMENT FEATURES, DIMENSIONS, WEIGHTS, PERFORMANCE CHARACTERISTICS, AND CAPACITIES. CAPACITY AND PERFORMANCE CALCULATION SHALL BE ADJUSTED TO INDICATE ACTUAL EQUIPMENT PERFORMANCE AT THE PROJECT ELEVATION. LITERATURE OR DRAWINGS THAT DESCRIBE MORE THAN ONE MODEL OR SIZE OF EQUIPMENT SHALL BE MARKED WITH ARROWS OR OTHERWISE CLEARLY INSCRIBED TO IDENTIFY THE ACTUAL EQUIPMENT THAT WILL BE FURNISHED. ALL OPTIONS AND SPECIAL PARTS OF FEATURES SHALL ALSO BE CLEARLY IDENTIFY. ALL SUBMITTED MATERIALS MUST BE CLEAR, COMPLETE, AND LEGIBLE. ALL SUBMITTALS OF THIS SCOPE MUST BE SUBMITTED AT ONE TIME: MULTIPLE AND VARIED SUBMITTALS WILL BE REJECTED.

B. SUBMITTALS FOR ALL EQUIPMENT SHALL BE ROUTED THROUGH AND REVIEWED BY THE CONTRACTOR. THE CONTRACTOR SHALL CHECK ALL SUBMITTALS FOR ADEQUATE IDENTIFICATION, CORRECTNESS, AND COMPLIANCE WITH CONTRACT DRAWINGS AND SPECIFICATIONS AND APPLY A STAMP OF APPROVAL. FOR SUBMITTALS THAT ARE REQUIRED TO BE REVIEWED BY THE ENGINEER, A DIGITAL COPY SHALL BE FORWARDED FOR REVIEW AFTER REVIEW AND APPROVAL BY THE CONTRACTOR. THESE SHALL BE RETURNED AND SHALL BE REVISED AND RESUBMITTED UNTIL ACCEPTED BY THE ENGINEER. PROVIDE PRODUCT DATA FOR EACH PIECE OF EQUIPMENT/COMPONENT LISTED BELOW:

1. FLOOR AND ROOF DRAINS, FLOOR SINKS, CLEANOUTS.
2. ALL PLUMBING FIXTURES AND ACCESSORIES.
3. PUMPS.
4. WATER HEATERS.
5. VALVES AND PIPE ACCESSORIES.
6. PIPE INSULATION AND LOCATIONS.

C. APPROVED MANUFACTURERS, WHICH MAY SUBMIT EQUAL PRODUCT TO THOSE SPECIFIED, ARE LISTED IN THE EQUIPMENT SCHEDULES. ANY SUBMITTAL FOR CONSIDERATION AS AN EQUAL TO THAT SCHEDULED MUST CONTAIN ALL INFORMATION REQUIRED TO EVALUATE THIS CLAIM. MANUFACTURERS NOT LISTED AS EQUAL MUST SUBMIT IN WRITING FOR REVIEW FIVE DAYS PRIOR TO BID CLOSING. CONTRACTOR IS RESPONSIBLE TO ASSURE ANY SUBMITTED ITEM MEETS ALL PHYSICAL AND PERFORMANCE REQUIREMENTS AS INTENDED IN THE DESIGN DOCUMENTS.
D. APPROVAL OF SUBMITTALS BY THE ENGINEER SHALL NOT RELIEVE THE CONTRACTOR FROM RESPONSIBILITY FOR ERRORS IN SHOP DRAWINGS OR OTHER SUBMITTAL LITERATURE.
E. CONTRACTOR HAS THE SOLE RESPONSIBILITY TO COORDINATE ANY SUBSTITUTIONS WITH ALL OTHER DISCIPLINES. EQUIPMENT OF GREATER POWER, DIMENSIONS, CAPACITIES, AND RATINGS MAY BE FURNISHED PROVIDED SUCH PROPOSED EQUIPMENT IS APPROVED IN WRITING AND CONNECTING MECHANICAL AND ELECTRICAL SERVICES, CIRCUIT BREAKERS, CONDUITS, MOTORS, BASES, AND EQUIPMENT SPACES ARE INCREASED. NO ADDITIONAL COSTS WILL BE ACCEPTED FOR THESE INCREASES, IF LARGER EQUIPMENT IS PROVIDED. IF MINIMUM ENERGY RATINGS OR EFFICIENCIES OF THE EQUIPMENT ARE SPECIFIED, THE EQUIPMENT MUST MEET THE DESIGN REQUIREMENTS AND COMMISSIONING REQUIREMENTS.

1.5 DELIVERY, STORAGE, AND HANDLING

A. DELIVER PRODUCTS TO THE PROJECT PROPERLY IDENTIFIED WITH NAMES, MODEL NUMBERS, TYPES, GRADES, COMPLIANCE LABELS, AND OTHER INFORMATION NEEDED FOR IDENTIFICATION.
B. ALL MECHANICAL EQUIPMENT AND MATERIAL ITEMS SHALL BE PROTECTED FROM WEATHER AND VANDALISM PRIOR TO ACTUAL INSTALLATION. FAN WHEELS, PUMPS AND OTHER ROTATING MACHINERY SHALL BE PERIODICALLY ROTATED DURING STORAGE. ANY FACTORY PAINTED EQUIPMENT SCRATCHED OR MARRED DURING SHIPMENT OR CONSTRUCTION SHALL BE RESTORED TO ORIGINAL, "NEW" CONDITION. THIS INCLUDES COMPLETE REPAINTING OF THE EQUIPMENT IF NECESSARY TO PROVIDE EXACT PAINT MATCH.
C. CONTRACTOR IS RESPONSIBLE FOR RECEIVING AND OFFLOADING EQUIPMENT OF HIS SCOPE. IMMEDIATELY UPON RECEIPT, CONTRACTOR SHALL INSPECT ALL EQUIPMENT AND MATERIAL FOR SHIPPING DAMAGE AND REPLACE ANY DEFECTIVE ITEMS AT NO INCREASE TO CONTRACT AMOUNT.

1.6 SEQUENCING AND SCHEDULING

A. COORDINATE PLUMBING EQUIPMENT INSTALLATION WITH OTHER BUILDING COMPONENTS PRIOR TO ORDERING OR FABRICATION OF ADJOINING WORK.
B. COORDINATE THE INSTALLATION OF REQUIRED SUPPORTING DEVICES AND SET SLEEVES IN POURED-IN-PLACE CONCRETE AND OTHER STRUCTURAL COMPONENTS AS THEY ARE CONSTRUCTED. ARRANGE FOR CHASES, SLOTS, AND OPENINGS IN BUILDING STRUCTURE DURING PROGRESS OF CONSTRUCTION TO ALLOW FOR MECHANICAL INSTALLATIONS.
C. SEQUENCE, COORDINATE, AND INTEGRATE INSTALLATIONS OF MECHANICAL MATERIALS AND EQUIPMENT FOR EFFICIENT FLOW OF THE WORK. COORDINATE INSTALLATION OF LARGE EQUIPMENT REQUIRING POSITIONING PRIOR TO CLOSING IN THE BUILDING.
D. COORDINATE CONNECTION OF MECHANICAL SYSTEMS WITH EXTERIOR UNDERGROUND AND OVERHEAD UTILITIES AND SERVICES. COMPLY WITH REQUIREMENTS OF GOVERNING REGULATIONS, FRANCHISED SERVICE COMPANIES, AND CONTROLLING AGENCIES. COORDINATE CONNECTION OF ELECTRICAL SERVICES.
E. PROVIDE IDENTIFICATION OF ALL EQUIPMENT. COORDINATE INSTALLATION OF IDENTIFYING DEVICES AFTER COMPLETING COVERAGE AND PAINTING WHERE DEVICES ARE APPLIED TO SURFACES. INSTALL IDENTIFYING DEVICES PRIOR TO INSTALLING ACOUSTICAL CEILINGS AND SIMILAR CONCEALMENT.

1.7 PROJECT CLOSE-OUT

A. CONTRACTOR SHALL FURNISH A WRITTEN GUARANTEE TO REPLACE OR REPAIR ANY DEFECTS IN WORKMANSHIP OR EQUIPMENT, WHICH DEVELOP WITHIN ONE YEAR FROM ACCEPTANCE BY THE OWNER. CONTRACTOR MUST ASSUME RESPONSIBILITY FOR ALL EXPENSES INCURRED TO REPAIR OR REPLACE HIS WORK AS WELL AS WORK OF OTHER TRADES THAT MAY BE AFFECTED BY THIS REPLACEMENT.
B. CONTRACTOR SHALL MAINTAIN A REDLINED SET OF CONSTRUCTION DRAWINGS SHOWING DEVIATIONS BETWEEN THE DRAWINGS AND INSTALLED CONDITIONS. THESE SHALL BE TURNED OVER TO THE OWNER AT ACCEPTANCE OF THE WORK.
C. PROVIDE THREE (3) COMPLETE SETS OF OPERATION AND MAINTENANCE MANUALS. THESE ARE TO INCLUDE ALL EQUIPMENT CUT SHEETS, MANUFACTURERS WARRANTY INFORMATION, AND CONTRACTORS WARRANTY LETTER AND CONTACT INFORMATION.
D. PROVIDE THREE (3) REVIEWED BALANCE REPORTS OF WATER AND AIR SYSTEMS AS APPLICABLE.

PART 2 - PRODUCTS
2.1 GENERAL PIPE MATERIALS AND FITTINGS

A. ABOVE GRADE DOMESTIC WATER PIPING SHALL BE ANY OF THE FOLLOWING:-

1. ALL SIZES: HARD COPPER TUBE CONFORMING TO ASTM B-88, TYPE-L: COPPER PRESSURE FITTINGS PER ASME B16.18; AND ALLOY SN95 SOLDER WITH WATER SOLUBLE FLUX.
2. NPS 1 AND SMALLER: PEX PER ASTM F877, SDR 9 TUBING, DISTRIBUTION MANIFOLD, INSERT FITTINGS, AND CRIMPED JOINTS.

B. BELOW GRADE DOMESTIC WATER PIPING SHALL BE ANY OF THE FOLLOWING:-

1. SOFT COPPER TUBE, TYPE K OR L CONFORMING TO ASTM B-88: COPPER PRESSURE FITTINGS AND SOLDERED JOINTS.
2. WRAP BURIED METALLIC PIPE PER ASTM A 674 OR AWWA C105, HDPE, CROSS LAMINATED PE FILM OF 0.004 INCH (0.10-MM) OR LLDPE, CROSS LAMINATED PE FILM OF 0.008-INCH (0.20-MM) MINIMUM THICKNESS.
3. HDPE (HIGH DENSITY POLYETHYLENE) PLASTIC PIPE AND FITTING FOR WATER SERVICE ENTRY PIPING.

a. PIPE CONFORMING TO ASTM D 2239, ASTM D 2737, AWWA C901, MINIMUM 160 PSI PRESSURE CLASS,SDR EQUAL TO 9.
b. FITTINGS CONFORMING TO ASTM D 2609, METAL INSERT FITTING AND TWO STAINLESS STEEL CLAMPS; FOR OVER 1-1/2 INCH,SPECIAL, HEAVY DUTY TIGHTENING CLAMPS.

C. ABOVE GRADE SANITARY WASTE & VENT SHALL BE ANY OF THE FOLLOWING:

1. PVC SOIL PIPE AND FITTINGS; STANDARD AND HEAVY-DUTY SHIELDED, STAINLESS STEEL COUPLINGS; AND AND HUBLESS COUPLING JOINTS
2. SOLID WALL ABS PIPE PER ASTM D 2661, SCHEDULE 40, ABS SOCKET FITTINGS, AND SOLVENT CEMENTED JOINTS.
3. SOLID WALL PVC PIPE PER ASTM D2665, SCHEDULE 40 DRAIN, WASTE & VENT, PVC SOCKET FITTINGS, AND SOLVENT CEMENTED JOINTS.
4. CELLULAR-CORE ABS PIPE PER ASTM F 628, SCHEDULE 40.
5. CELLULAR-CORE PVC PIPE PER ASTM F 891, SCHEDULE 40.

D. BELOW GRADE SANITARY WASTE AND VENT SHALL BE ANY OF THE FOLLOWING:

1. PVC SOIL PIPE AND FITTINGS PER CISPI 301; HEAVY DUTY SHIELDED, STAINLESS STEEL COUPLINGS; AND HUBLESS-COUPLING JOINTS.
2. SOLID WALL ABS PIPE PER ASTM D 2661, SCHEDULE 40, ABS SOCKET FITTINGS, AND SOLVENT-CEMENTED JOINTS.
3. SOLID WALL PVC PIPE AS PER ASTM D 2665, SCHEDULE 40 DRAIN,WASTE AND VENT, PVC SOCKET FITTINGS, AND SOLVENT CEMENTED JOINTS.
4. CELLULAR-CORE ABS PIPE PER ASTM F 628, SCHEDULE 40.
5. CELLULAR-CORE PVC PIPE PER ASTM F 891, SCHEDULE 40.

E. STORM DRAINAGE PIPING SHALL BE ANY OF THE FOLLOWING:

1. PVC SOIL PIPE AND FITTINGS PER CISPI 301; HEAVY-DUTY SHIELDED, STAINLESS-STEEL COUPLINGS; AND HUBLESS-COUPLING JOINTS.
2. SOLID WALL ABS PIPE PER ASTM D 2661, SCHEDULE 40, ABS SOCKET FITTINGS, AND SOLVENT-CEMENTED JOINTS.
3. SOLID WALL PVC PIPE PER ASTM D2665, SCHEDULE 40 DRAIN, WASTE AND VENT, PVC SOCKET FITTINGS, AND SOLVENT-CEMENTED JOINTS.
4. CELLULAR-CORE ABS PIPE PER ASTM F 628, SCHEDULE 40.
5. CELLULAR-CORE PVC PIPE PER ASTM F 891, SCHEDULE 40.

F. FUEL GAS PIPING SHALL BE ANY OF THE FOLLOWING:

1. ALL SIZES: STEEL PIPE PER ASTM A53/A 53M: TYPE E OR S; GRADE B; BLACK. WALL THICKNESS OF WROUGHT-STEEL PIPE SHALL COMPLY WITH ASME B36.10M.
a. MALLEABLE-IRON THREADED FITTINGS; ASME B16.3, CLASS 150, STANDARD PATTERN, WITH THREADED ENDS ACCORDING TO ASME B1.20.1
b. STEEL WELDING FITTINGS: ASME B16.9, WROUGHT STEEL OR ASME B16.11, FORGED STEEL.
c. UNIONS: ASMEB16.39, CLASS 150, MALLEABLE IRON WITH BRASS-TO-IRON SEAT GROUND JOINT, AND THREADED ENDS ACCORDING TO ASME B1.20.1
d. JOINT COMPOUND AND TAPE: SUITABLE FOR NATURAL GAS.
e. STEEL FLANGES AND FLANGED FITTINGS: ASME B16.5.

2. NPS 1 AND SMALLER MAY BE CORRUGATED STAINLESS STEEL TUBING SYSTEMS.
a. DESCRIPTION: COMPLY WITH AGA LC 1 AND INCLUDE THE FOLLOWING:
1) TUBING: CORRUGATED STAINLESS STEEL WITH PLASTIC JACKET OR COATING.
2) FITTINGS: COPPER ALLOY WITH ENDS MADE TO FIT CORRUGATED TUBING. INCLUDE ENDS WITH THREADS ACCORDING TO ASME B1.20.01. IF CONNECTION TO THREADED PIPE OR FITTINGS IS REQUIRED.
3) STRIKER PLATES: STEEL, DESIGNED TO PROTECT TUBING FROM PENETRATIONS.
4) MANIFOLDS: MALLEABLE IRON OR STEEL WITH PROTECTIVE COATING. INCLUDE THREADED CONNECTIONS ACCORDING TO ASME B1.20.1 FOR PIPE INLET AND CORRUGATED TUBING OUTLETS.
b. ACCEPTABLE MANUFACTURERS: OMEGAFLEX, INC., TITLEFLEX XORP., TRU-FLEX METAL HOSE CORP., WARD INDUSTRIES, INC.

G. INDIRECT WASTE PIPING SHALL BE ANY OF THE FOLLOWING:

1. SOLID WALL PVC PIPE PER ASTM D 2665, SCHEDULE 40 DRAIN, WASTE AND VENT, PVC SOCKET FITTINGS, AND SOLVENT-CEMENTED JOINTS.
2. HARD COPPER TUBE CONFORMING TO ASTM B-88, TYPE M WATER TUBE, DRAWN AND TEMPER; COPPER PRESSURE FITTINGS PER ASME B16.18; AND ALLOY SN95 SOLDER WITH WATER SOLUBLE FLUX.

H. VALVES AND PLUMBING SPECIALITIES:

1. ACCEPTABLE MANUFACTURERS: WATTS, APOLLO, RED & WHITE, NIBCO, MILWAUKEE, ARMSTRONG.
2. GENERAL USE VALVES:
a. BALL VALVE(FULL PORT THRU 3") - WATTS FBVS-1 SERIES
b. GATE VALVE(THRU 4") - WATTS WGV-1 SERIES
c. GAS(THRU 1") - WATTS GBV SERIES
d. GLOBE (THRU 2") - WATTS GLV SERIES
e. CHECK (THRU 3") - WATTS WCV-2 SERIES
f. STRAINER (THRU 2") - WATTS S777SI SERIES
g. BALANCE (THRU 3") - WATTS CSM-61-M1 SERIES
h. BUTTERFLY (3" AND LARGER) -

3. WATER HAMMER ARRESTERS (SIOUX CHIEF, PPP, SMITH): METAL BELLOWS OR COPPER TUBE WITH PISTON PER ASSE 1010 OR PDI-WH 201. PROVIDE ACCESS PANELS AS REQUIRED.

I. DIELECTRIC FITTINGS:
1. COMBINATION FITTING OF COPPER ALLOY AND FERROUS MATERIALS WITH THREADED, SOLDER-JOINT, PLAIN, OR WELD-NECK END CONNECTIONS THAT MATCH PIPING SYSTEM MATERIALS.
2. DIELECTRIC UNIONS: FACTORY-FABRICATED, UNION ASSEMBLY, FOR 250-PSIG MINIMUM WORKING PRESSURE AT 180 DEG F.
3. DIELECTRIC COUPLINGS: GALVANIZED STEEL COUPLING WITH INERT AND NON-CORROSIVE, THERMOPLASTIC LINING; THREADED ENDS; AND 300-PSIG MINIMUM WORKING PRESSURE AT 225 DEG F.

2.2 PIPE JOINT CONSTRUCTION

A. SOLDERED JOINTS: USE ASTM B813, WATER-FLUSHABLE,;EAD-FREE FLUX; ASTM B32, LEAD-FREE-AALOY SOLDER; AND ASTM B 828 PROCEDURE, UNLESS OTHERWISE INDICATED.
B. BRAZING FILLER METALS: AWS A5.8, BCUP SERIES,COPPER-PHOSPORUS ALLOYS FOR GENERAL DUTY BRAZING, UNLESS OTHERWISE INDICATED; AND AWS 5.8, BAG1,SILVER ALLOY FOR REFRIGERANT PIPING,UNLESS OTHERWISE INDICATED.
C. EXTRUDED-TEE CONNECTIONS: FORM TEE IN COPPER TUBE ACCORDING TO ASTM F 2014. USE TOOL DESIGNED FOR COPPER TUBE; DRILL PILOT HOLE,FORM COLLAR FOR OUTLET. DIMPLE TUBE TO FORM SEATING STOP, AND BRAZE BRANCH TUBE INTO COLLAR.
D. SOLVENT CEMENTS FOR JOINING PLASTIC PIPING:
1. ABS PIPING: ASTM D 2235.
2. CPVC PIPING: ASTM F493.
3. PVC PIPING:ASTM D 2564. INCLUDE PRIMER ACCORDING TOASTM F656.
E. PVC TO ABS PIPING TRANSITION: ASTM D 3138.

2.3 PIPE INSULATION

A. ALL INSULATION SHALL MEET FLAME/SMOKE SPREAD RATING OF $\frac{25}{50}$ ACCORDING TO ASTM E84 AND NFPA 90A.
B. INSULATION TYPES:

1. FLEXIBLE ELASTOMERIC: CLOSED-CELL, SPONGE- OR EXPANDED-RUBBER MATERIALS. COMPLY WITH ASTM C 534, TYPE I FOR TUBULAR MATERIALS AND TYPE II FOR SHEET MATERIALS.

2. GLASS-FIBER, PIPE INSULATION: GLASS FIBERS BONDED WITH A THERMOSETTING RESIN. SEMI RIGID BOARD MATERIAL WITH FACTORY-APPLIED ASJ JACKET COMPLYING WITH ASTM C 1393, TYPE II OR TYPE IIIA CATEGORY 2, OR WITH PROPERTIES SIMILAR TO ASTM C 612, TYPE IB. NOMINAL DENSITY IS 2.5 LB/CU. FT. OR MORE. THERMAL CONDUCTIVITY (K-VALUE) AT 100DEG F IS 0.29 BTU X IN./H X SQ. FT. X DEG F OR LESS.

3. JACKETS:
a. PROVIDE ALUMINUM JACKET TO COMPLY WITH ASTM B 209, ALLOY 3003, 3005, 3105 OR 5005, TEMPER H-14, ON ALL EXTERIOR PIPING WITH INSULATION. PROVIDE 3-MIL VAPOR BARRIER.

C. INSULATION SCHEDULE:

1. DOMESTIC COLD WATER:
a. ALL SIZES. INSULATION SHALL BE ONE OF THE FOLLOWING:
1) FLEXIBLE ELASTOMERIC, MIN. 1" THICK R-6.

2. DOMESTIC HOT WATER:
a. ALL SIZES. INSULATION SHALL BE ONE OF THE FOLLOWING:
1) FLEXIBLE ELASTOMERIC, MIN. 1" THICK R-6.

3. DOMESTIC RE-CIRCULATED HOT WATER:
a. NPS 1-1/2 AND SMALLER. INSULATION SHALL BE ONE OF THE FOLLOWING:
1) FLEXIBLE ELASTOMERIC, MIN. 1" THICK R-6.

b. NPS 2 AND LARGER: INSULATION SHALL BE ONE OF THE FOLLOWING:
1) FLEXIBLE ELASTOMERIC, MIN. 1" THICK R-6.

4. STORM DRAINAGE PIPING:
a. DRAIN BODIES AND HORIZONTAL PIPING. INSULATION SHALL BE ONE OF THE FOLLOWING:
1) GLASS-FIBER PIPE INSULATION, TYPE I: 1/2 INCHES THICK.
2) 4" BATT INSULATION MAY BE USED FOR DRAIN BODIES.

D. ACCEPTABLE MANUFACTURERS: ARMSTRONG, CERTAINEED, OWENS-CORNING, JOHNS MANVILLE, ARMACELL.

E. PIPE INSULATION R VALUES SHALL MEET OR EXCEED IECC R403.5.3.

PLUMBING LEGEND

PIPING SYMBOLS

SYMBOL	ABBREVIATION	DESCRIPTION
AV	AV	ACID VENT
AW	AW	ACID WASTE
CA	CA	COMPRESSED AIR
CD	CD	CONDENSATE DRAIN
DCW	DCW	DOMESTIC COLD WATER
DHW	DHW	DOMESTIC HOT WATER
DHWR	DHWR	DOMESTIC HOT WATER RETURN
DHW 140ºF	DHW 140ºF	140° DOMESTIC HOT WATER
DHWR 140ºF	DHWR 140ºF	140° DOMESTIC HOT WATER RETURN
ROS	ROS	REVERSE OSMOSIS SUPPLY
ROR	ROR	REVERSE OSMOSIS RETURN
MU	MU	MAKE-UP WATER
NPW	NPW	NON-POTABLE WATER
V	V	VENT
DIS	DIS	DEIONIZED WATER SUPPLY
DIR	DIR	DEIONIZED WATER RETURN
SAN	SAN	SANITARY SEWER
GW	GW	GREASE WASTE
GV	GV	GREASE VENT
RD	RD	STORM/ROOF DRAIN
ORD	ORD	OVERFLOW ROOF DRAIN
LPG	LPG	LIQUIFIED PETROLEUM GAS
G	G	NATURAL GAS-LOW PRESSURE
NGM	NGM	NATURAL GAS-MEDIUM PRESSURE
NGH	NGH	NATURAL GAS-HIGH PRESSURE
IRR	IRR	IRRIGATION
SCW	SCW	SOFT COLD WATER
SHW	SHW	SOFT HOT WATER
TWR (_ _ _)	TWR	TEMPERED WATER RETURN (TEMP °F)
TW (_ _ _)	TW	TEMPERED WATER (TEMP °F)
PD	PD	PUMPED DISCHARGE LINE
ICW	ICW	INDUSTRIAL COLD WATER
IHW	IHW	INDUSTRIAL HOT WATER
IHWR	IHWR	INDUSTRIAL HOT WATER RETURN
INW	INW	INDUSTRIAL WASTE
IA	IA	INSTRUMENT COMPRESSED AIR
IW	IW	INDIRECT WASTE
LA	LA	LAB COMPRESSED AIR

VALVE SYMBOLS

SYMBOL	DESCRIPTION
	GATE VALVE
	GLOBE VALVE
S	SOLENOID VALVE
	OS&Y VALVE
	BUTTERFLY VALVE
OR / OR	BALL VALVE
OR	CHECK VALVE
OR	PLUG VALVE
	BALANCING VALVE/CIRCUIT SETTER MEASURING DEVICE
	WATER PRESSURE REDUCING VALVE
	2-WAY CONTROL VALVE
	3-WAY MODULATING CONTROL VALVE
	FUEL GAS PRESSURE REGULATOR
	PRESSURE RELIEF VALVE
	TEMPERATURE AND PRESSURE RELIEF VALVE
	DRAIN VALVE
	VALVE IN VERTICAL
	FLOW SWITCH
	DIAPHRAGM (PROCESS SYSTEMS)
	REDUCED PRESSURE BACKFLOW PREVENTER (RPBP)

SECTION SYMBOL

A / P-100
SECTION LETTER
DRAWING NUMBER WHERE DETAILED

DETAIL SYMBOL

1 / P-500
DETAIL NUMBER
DRAWING NUMBER WHERE DETAILED

FIXTURE & EQUIPMENT SYMBOL

P##
LETTER REFER TO EQUIPMENT TYPE
NUMBER REFERS TO SPECIFIC EQUIPMENT
SYMBOL INDICATES FIXTURE/EQUIPMENT IDENTIFIED IN EQUIPMENT SCHEDULE

SCHEMATIC SYMBOLS

SYMBOL	DESCRIPTION
XX	KEYED NOTE
	POINT OF CONNECTION TO EXISTING
XXXXX	EXISTING PIPE TO BE REMOVED
	NEW PIPING
	EXISTING PIPING TO REMAIN
	NEW PIPE CONNECTION TO EXISTING PIPING
	SLOPE OF PIPE
	DIRECTION OF FLOW
	DROP IN PIPE
	RISE IN PIPE
	TOP CONNECTION, 45° OR 90°
	BOTTOM CONNECTION, 45° OR 90°
	CAPPED OUTLET
	SIDE CONNECTION
	UNION
	FLANGED UNION
	ORIFICE UNION
	REDUCER OR INCREASER
	ECCENTRIC REDUCER
	PIPE GUIDE
	FLEXIBLE CONNECTION
	UNIVERSAL TEMPERATURE-PRESSURE FITTING (PETE'S PLUG)
	STRAINER WITH BLOWDOWN VALVE & HOSE BIBB

SYMBOL		DESCRIPTION
		THERMOMETER
		PRESSURE GAUGE AND GAUGE COCK
		AQUASTAT
OR		WATER HAMMER ARRESTOR
		TEST PLUG (PRESS/TEMP)
		PENETRATION
	MAV	MANUAL AIR VENT (MAV)
A	AAV	AUTOMATIC AIR VENT (AAV)
	FS/FD/AD	FLOOR SINK , FLOOR DRAIN , AREA DRAIN
	FCO/COTG	FLOOR CLEANOUT/CLEANOUT TO GRADE
	DCOTG	TWO WAY OR DOUBLE CLEANOUT TO GRADE
	RD/OD/DD	ROOF DRAIN/OVERFLOW DRAIN/DECK DRAIN
	TP	TRAP PRIMER WITH ACCESS PANEL
	VTR	VENT THROUGH ROOF
	AG	AIR GAP FITTING
	(WH) (HB)	WALL HYDRANT, HOSE BIBB

ABBREVIATIONS

AFF	ABOVE FINISHED FLOOR	FOV	FUEL OIL VENT
AFG	ABOVE FINISHED GRADE	FV	FLUSH VALVE
ANT	ACID NEUTRALIZING TANK	GD	GUTTER DRAIN
AVTR	ACID RESISTANT VENT THROUGH ROOF	GI	GREASE INTERCEPTOR
B.C.	BALANCING COCK	GPH	GALLONS PER HOUR
BOP	BOTTOM OF PIPE	GPM	GALLONS PER MINUTE
BTU	BRITISH THERMAL UNIT	GWH	GAS WATER HEATER
BTUH	BTU PER HOUR	HB	HOSE BIBB
CWB	CLOTHES WASHER BOX	HD	HEAD
CFH	CUBIC FEET PER HOUR	HP	HORSEPOWER
CO	CLEANOUT	IN	INCHES
COTG	CLEANOUT TO GRADE	INV	INVERT
CP	CIRCULATION PUMP	kW	KILOWATT
CWV	COMBINATION WASTE AND VENT	MBh	1,000 BTUH
DCO	DOUBLE CLEANOUT	MV	MIXING VALVE
DCOTG	DOUBLE CLEANOUT TO GRADE	NA	NOT APPLICABLE
DF	DRINKING FOUNTAIN	NIC	NOT IN CONTRACT
DN	DOWN	No. #	NUMBER
DS	DOWNSPOUT	N.C.	NORMALLY CLOSED
DSN	DOWNSPOUT NOZZLE	N.O.	NORMALLY OPEN
EL	ELEVATION	OS&Y	OUTSIDE SCREW AND YOKE
EWH	ELECTRIC WATER HEATER	PH	PHASE
EWC	ELECTRIC WATER COOLER	Ph	POWERS OF HARDNESS
EEW	EMERGENCY EYEWASH	PSIG	POUNDS PER SQUARE INCH GAUGE
ES	EMERGENCY SHOWER	SP	STATIC PRESSURE
ESEW	EMERGENCY SHOWER EYE WASH	TD	TRENCH DRAIN
°F	DEGREES FAHRENHEIT	TYP	TYPICAL
FCO	FLOOR CLEANOUT	YB	YARD BOX
FFE	FINISHED FLOOR ELEVATION	YH	YARD HYDRANT
FT	FEET	WCO	WALL CLEANOUT
FOS	FUEL OIL SUPPLY	WC	WATER CLOSET
FOR	FUEL OIL RETURN		

GENERAL PLUMBING NOTES

(RE:ALL PLUMBING SHEETS)

G1 COORDINATE LOCATION OF VENTS THROUGH ROOF TO MAINTAIN 10' CLEARANCE FROM OUTSIDE AIR INTAKES
G2 SITE UTILITIES: THE MECHANICAL DOCUMENTS INDICATE CONNECTION LOCATION OF VARIOUS BUILDING SERVICES.COORDINATE WORK WITH THE SITE UTILITIES CONTRACTOR TO ENSURE PROPER INVERT ELEVATION, PIPE SLOPE GRADIENT, PIPE SIZE AND SEPARATION WITHIN TRENCH WORK. NOTIFY ARCHITECT OR ENGINEERING OF ANY DISCREPANCY BETWEEN DRAWINGS AND FIELD CONDITIONS.
G3 CONTRACTOR SHALL IDENTIFY ALL SERVICEABLE ITEMS (VALVES,CLEANOUTS,COILS ETC.) SO THAT THE CEILING SUBCONTRACTOR MAY KNOW WHERE TO INSTALL ACCESS-TYPE PANELS SHOULD A LIFT-UP TYPE CEILING NOT BE INSTALLED. THIS CONTRACTOR SHALL PROVIDE ACCESS PANELS FOR HIS WORK UNLESS SPECIFICALLY NOTED ON THE DRAWINGS. ARCHITECT SHALL APPROVE LOCATIONS OF ACCESS PANELS PRIOR TO INSTALLATION.
G4 PROVIDE ALL NECESSARY FLASHING, SEALING, ETC. TO MAINTAIN THE WATERPROOF INTEGRITY OF THE BUILDING AS REQUIRED BY THE INSTALLATION OR REMOVAL OF ITEMS AS REQUIRED BY THIS SCOPE OF WORK.
G5 ALL PENETRATIONS MADE THROUGH RATED ASSEMBLIES TO ACCOMMODATE WORK OF THIS SECTION MUST BE SEALED TO MAINTAIN THE RATING OF SUCH ASSEMBLY BY A U.L RECOGNIZED SEALING METHOD.
G6 PROVIDE ALL CUTTING AND PATCHING REQUIRED FOR INSTALLATION OF THIS WORK. COORDINATE ALL BLOCKING, SUPPORT, ETC. NECESSARY FOR THE INSTALLATION OF THIS WORK WITH THE GENERAL CONTRACTOR.
G7 THE RESPECTIVE SUB-CONTRACTOR, AT HIS EXPENSE, SHALL OBTAIN ALL PERMITS AND FEES REQUIRED FOR THIS SCOPE OF WORK ON THIS PROJECT. THE SUB-CONTRACTORS SHALL ALSO SCHEDULE ALL REQUIRED INSPECTIONS AND OBTAIN CERTIFICATES FOR HIS WORK, AT HIS EXPENSE.
G8 CONTRACTOR HAS SOLE RESPONSIBILITY TO COORDINATE ANY SUBSTITUTIONS WITH ALL OTHER DISCIPLINES. EQUIPMENT OF GREATER POWER, DIMENSIONS, CAPACITIES, AND RATINGS MAY BE FURNISHED PROVIDED SUCH PROPOSED EQUIPMENT HAS BEEN SUBMITTED FOR REVIEW, IN WRITING AND CONNECTING MECHANICAL AND ELECTRICAL SERVICES, CIRCUIT BREAKERS, CONDUIT, MOTORS, BASES, AND EQUIPMENT SPACES ARE ADJUSTED APPROPRIATELY. NO ADDITIONAL COSTS WILL BE APPROVED FOR THESE INCREASES, IF LARGER EQUIPMENT ARE SPECIFIED MUST MEET THE DESIGN REQUIREMENTS AND COMMISSIONING REQUIREMENTS. CONTRACTOR IS SOLELY RESPONSIBLE FOR SUBSTITUTED EQUIPMENT MEETING THE INTENT OF THE ORIGINAL DESIGNED EQUIPMENT MEETING THE INTENT OF THE ORIGINAL DESIGNED EQUIPMENT IN ALL ASPECTS.
G9 PROVIDE A COMMISSIONING PLAN DEVELOPED BY A REGISTERED DESIGN PROFESSIONAL OR APPROVED AGENCY AS/WHERE REQUIRED BY THE LOCAL AUTHORITY HAVING JURISDICTION.

SHEET INDEX

P1.0 - PLUMBING SPECIFICATIONS
P1.1 - FLOOR PLAN - PLUMBING
P3.1 - ISOMETRIC VIEW - PLUMBING
P5.1 - PLUMBING DETAILS
P6.1 - PLUMBING LEGEND & SCHEDULE

REVIEWED FOR CODE COMPLIANCE 11/08/2022

COLORADO LICENSED PROFESSIONAL ENGINEER STEVE T ALSCHULER 0042034 6/17/2022

INDOOR ENVIRONMENTS USA
A LIMITED LIABILITY COMPANY
1920 13th STREET, SUITE B1
BOULDER, CO80302
720 742-1587

NOTICE: DUTY OF COOPERATION
Release of these plans contemplates further cooperation among the owner, his contractor and the architect. Design and construction are complex. Although the architect and his consultants have performed their services with due care and diligence, they cannot guarantee perfection. Communication is imperfect and every contingency cannot be anticipated. Any ambiguity or discrepancy discovered by the use of these plans shall be reported immediately to the architect. Failure to notify the architect compounds misunderstanding and increases construction costs. A failure to cooperate by a simple notice to the architect shall relieve the architect from responsibility for the consequences. Changes made from the plans without consent of the architect are unauthorized and shall relieve the architect of responsibility for all consequences arriving out of such changes.

All design, documents and data prepared by Eric Smith Associates, P.C. as instruments of service shall remain property of Eric Smith Associates, P.C. and shall not be copied, changed or disclosed in any form whatsoever without first obtaining the express written consent of Eric Smith Associates, P.C.

© Eric Smith Associates, P.C.

REVISIONS

No.	Description	Date

uchealth

YVMC MOUNTAIN CLINIC
2305 MOUNTER WERNER CIRCLE'
SUITE P.027
STEAMBOAT SPRINGS, COLORADO

ERIC SMITH ASSOCIATES, P.C.
1919 SEVENTH STREET
BOULDER, COLORADO, 80302
(303) 442-5458, (303) 442-4745 FAX

Job Number:	
Date:	06/20/22
Drawn By:	AS
Checked By:	JF

Project Phase

Sheet Title
PLUMBING SPECIFICATION

Sheet Number
P1.0

REVIEWED FOR CODE COMPLIANCE
11/08/2022

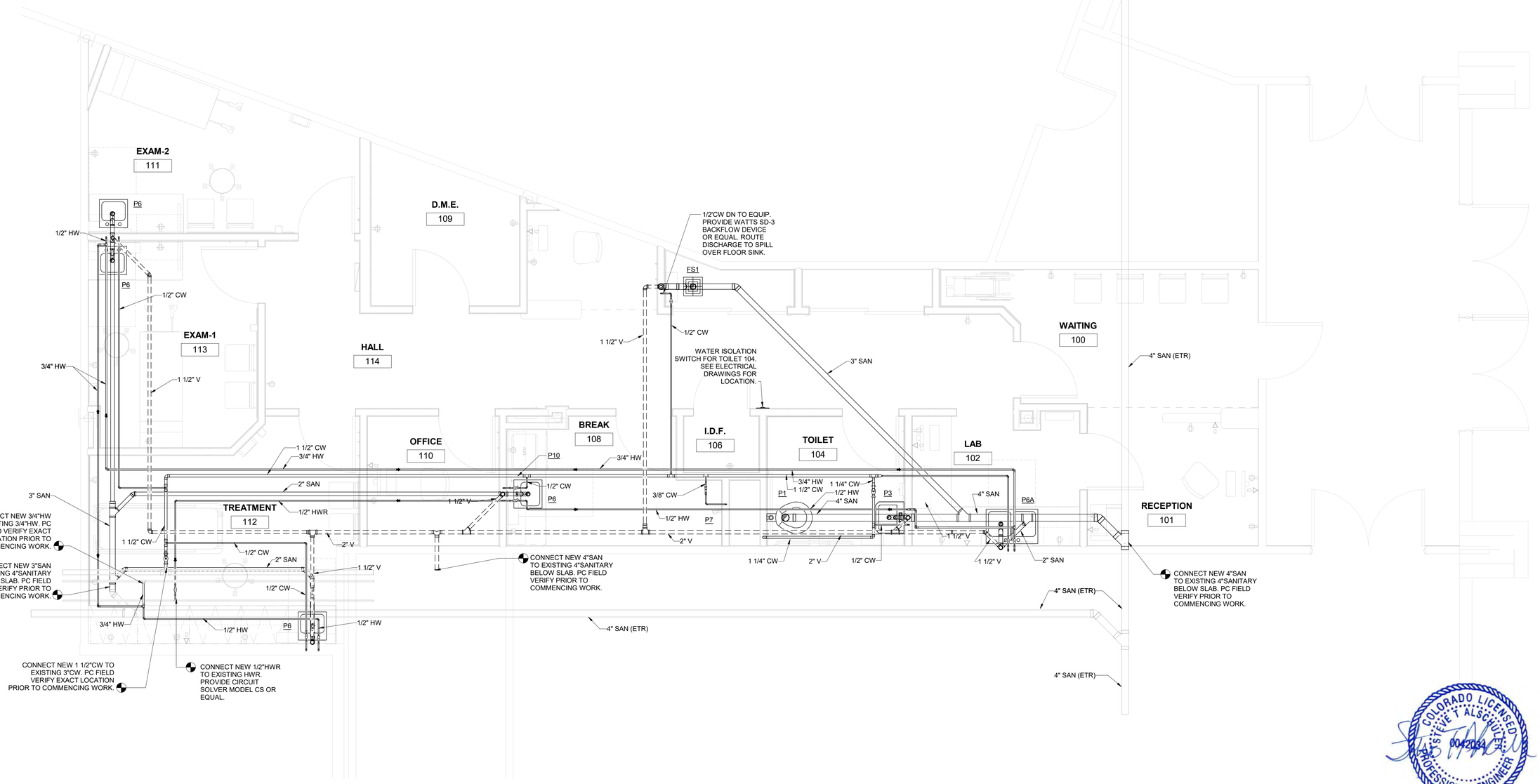

1 PLUMBING FLOOR PLAN
3/8" = 1'-0"

COLORADO LICENSED
STEVE T ALSCHULER
0042034
PROFESSIONAL ENGINEER
6/17/2022

INDOOR ENVIRONMENTS USA
A LIMITED LIABILITY COMPANY
1920 13th STREET, SUITE B1
BOULDER, CO80302
720 742-1587

NOTICE: DUTY OF COOPERATION

Release of these plans contemplates further cooperation among the owner, his contractor and the architect. Design and construction are complex. Although the architect and his consultants have performed their services with due care and diligence, they cannot guarantee perfection. Communication is imperfect and every contingency cannot be anticipated. Any ambiguity or discrepancy discovered by the use of these plans shall be reported immediately to the architect. Failure to notify the architect compounds misunderstanding and increases construction costs. A failure to cooperate by a simple notice to the architect shall relieve the architect from responsibility for the consequences. Changes made from the plans without consent of the architect are unauthorized and shall relieve the architect of responsibility for all consequences arriving out of such changes.

All design, documents and data prepared by Eric Smith Associates, P.C. as instruments of service shall remain property of Eric Smith Associates, P.C. and shall not be copied, changed or disclosed in any form whatsoever without first obtaining the express written consent of Eric Smith Associates, P.C.

© Eric Smith Associates, P.C.

REVISIONS

No.	Description	Date

uchealth

YVMC MOUNTAIN CLINIC
2305 MOUNTER WERNER CIRCLE'
SUITE P.027
STEAMBOAT SPRINGS, COLORADO

ERIC SMITH ASSOCIATES, P.C.
1919 SEVENTH STREET
BOULDER, COLORADO, 80302
(303) 442-5458, (303) 442-4745 FAX

Job Number:	
Date:	06/20/22
Drawn By:	AS
Checked By:	JF

Project Phase

Sheet Title
PLUMBING FLOOR PLAN

Sheet Number
P1.1

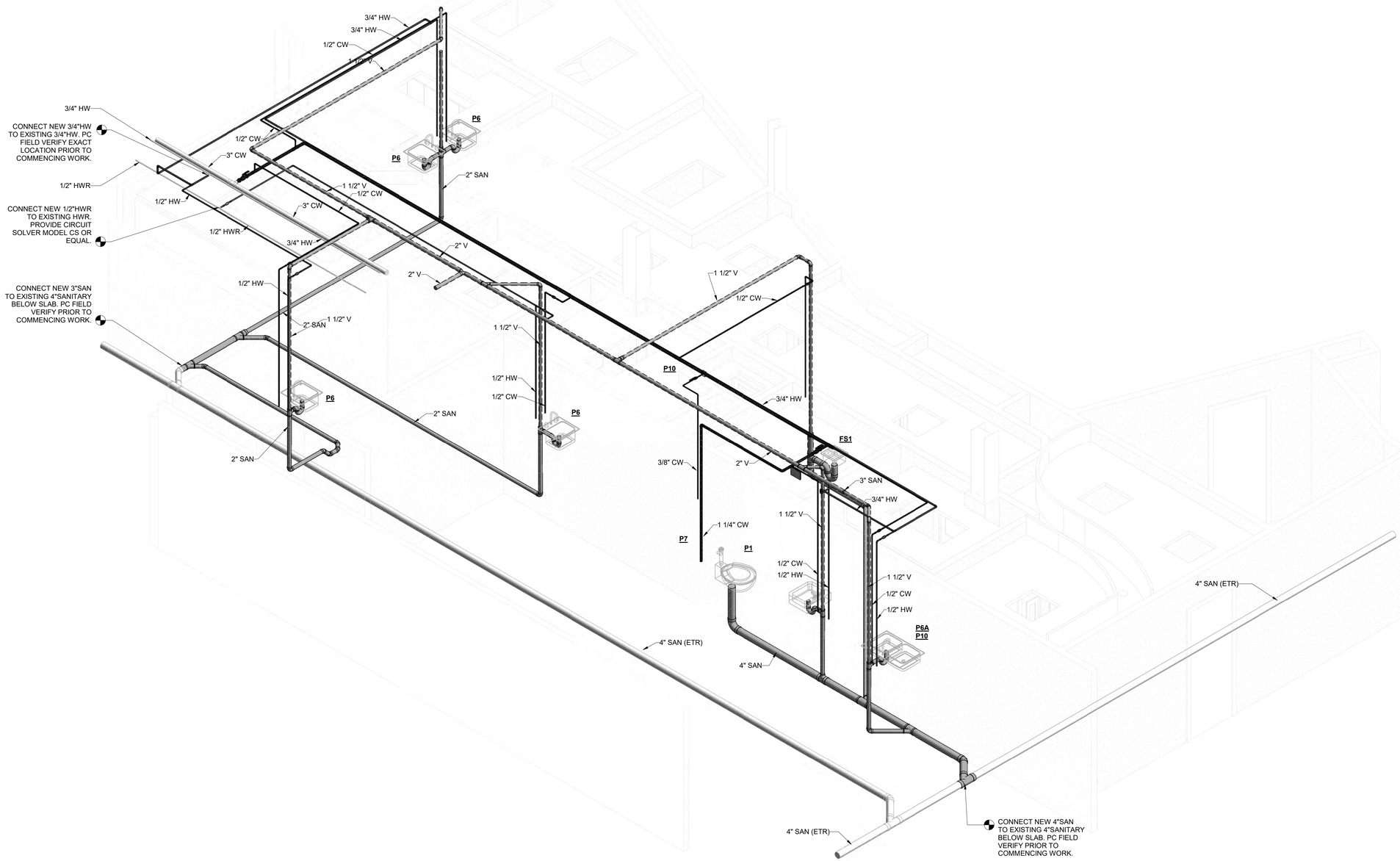

1 PLUMBING ISOMETRIC VIEW

REVIEWED FOR CODE COMPLIANCE
11/08/2022

INDOOR ENVIRONMENTS USA
A LIMITED LIABILITY COMPANY
1920 13th STREET, SUITE B1
BOULDER, CO80302
720 742-1587

NOTICE: DUTY OF COOPERATION

Release of these plans contemplates further cooperation among the owner, his contractor and the architect. Design and construction are complex. Although the architect and his consultants have performed their services with due care and diligence, they cannot guarantee perfection. Communication is imperfect and every contingency cannot be anticipated. Any ambiguity or discrepancy discovered by the use of these plans shall be reported immediately to the architect. Failure to notify the architect compounds misunderstanding and increases construction costs. A failure to cooperate by a simple notice to the architect shall relieve the architect from responsibility for the consequences. Changes made from the plans without consent of the architect are unauthorized and shall relieve the architect of responsibility for all consequences arriving out of such changes.

All design, documents and data prepared by Eric Smith Associates, P.C. as instruments of service shall remain property of Eric Smith Associates, P.C. and shall not be copied, changed or disclosed in any form whatsoever without first obtaining the express written consent of Eric Smith Associates, P.C.

© Eric Smith Associates, P.C.

REVISIONS

No.	Description	Date

uchealth

YVMC MOUNTAIN CLINIC

2305 MOUNTER WERNER CIRCLE'
SUITE P.027
STEAMBOAT SPRINGS, COLORADO

ESA
ERIC SMITH ASSOCIATES, P.C.
1919 SEVENTH STREET
BOULDER, COLORADO, 80302
(303) 442-5458, (303) 442-4745 FAX

COLORADO LICENSED
STEVE T. ALSCHULER
PROFESSIONAL ENGINEER
0042034
06/17/2022

Job Number:	
Date:	06/20/22
Drawn By:	AS
Checked By:	JF

Project Phase

Sheet Title
PLUMBING ISOMETRIC VIEW

Sheet Number
P3.1

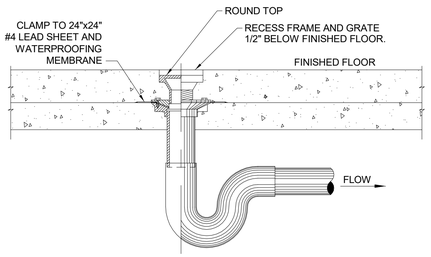

1 FLOOR DRAIN DETAIL
NOT TO SCALE

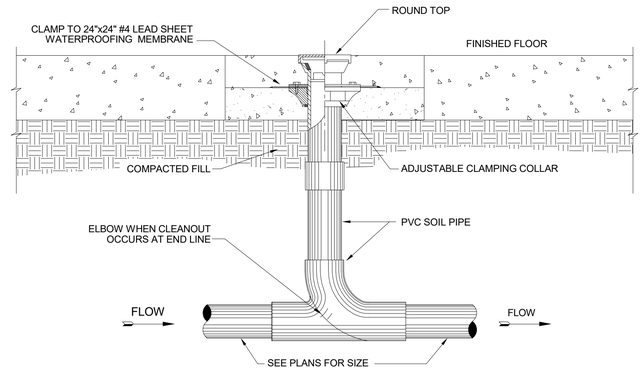

2 FLOOR CLEANOUT DETAIL
NOT TO SCALE

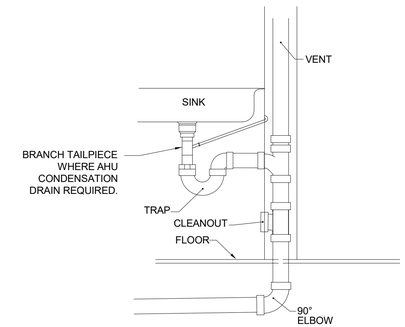

3 STANDARD PIPING DIAGRAM
NOT TO SCALE

REVIEWED FOR CODE COMPLIANCE
11/08/2022

INDOOR ENVIRONMENTS USA
A LIMITED LIABILITY COMPANY
1920 13th STREET, SUITE B1
BOULDER, CO80302
720 742-1587

NOTICE: DUTY OF COOPERATION
Release of these plans contemplates further cooperation among the owner, his contractor and the architect. Design and construction are complex. Although the architect and his consultants have performed their services with due care and diligence, they cannot guarantee perfection. Communication is imperfect and every contingency cannot be anticipated. Any ambiguity or discrepancy discovered by the use of these plans shall be reported immediately to the architect. Failure to notify the architect compounds misunderstanding and increases construction costs. A failure to cooperate by a simple notice to the architect shall relieve the architect from responsibility for the consequences. Changes made from the plans without consent of the architect are unauthorized and shall relieve the architect of responsibility for all consequences arriving out of such changes.

All design, documents and data prepared by Eric Smith Associates, P.C. as instruments of service shall remain property of Eric Smith Associates, P.C. and shall not be copied, changed or disclosed in any form whatsoever without first obtaining the express written consent of Eric Smith Associates, P.C.

© Eric Smith Associates, P.C.

REVISIONS

No.	Description	Date

uchealth

YVMC MOUNTAIN CLINIC
2305 MOUNTER WERNER CIRCLE'
SUITE P.027
STEAMBOAT SPRINGS, COLORADO

ERIC SMITH ASSOCIATES, P.C.
1919 SEVENTH STREET
BOULDER, COLORADO, 80302
(303) 442-5458, (303) 442-4745 FAX

Job Number:	
Date:	06/20/22
Drawn By:	AS
Checked By:	JF

Project Phase

Sheet Title
PLUMBING DETAILS

Sheet Number
P5.1

PLUMBING FIXTURE SCHEDULE

DESIGNATION	MANUFACTURER	MODEL #	FIXTURE DESCRIPTION	CONNECTION SCHEDULE			
				WASTE	VENT	CW	HW
P1	KOHLER	ULTRA K-96053	17" HIGH VITREOUS CHINA WATER CLOSET W/ ELONGATED BOWL (ADA) FLUSH VALVE - KOHLER K-76321-CP SEAT - (NO LID) - CHURCH MODEL 9500-SSC LOW WATER CONSUMPTION (1.6 GALLONS PER FLUSH) LOCATE FLUSH CONTROL ON WIDE SIDE OF STALL	3"	2"	1"	--
P3	KOHLER	CHESAPEAKE K-1728-0	VITREOUS CHINA WALL-HUNG LAVATORY (ADA) FAUCET - CHICAGO 8595-317E2805 TRAP - 1 1/4" CAST BRASS WITH C.O. PLUG SUPPLY - 3/8" ANGLE-TYPE WITH STOPS PROVIDE OFFSET TAILPIECE INSULATE TRAP OUTLET & HW SUPPLY TO MEET A.D.A.	2"	1 1/4"	1/2"	1/2"
P6	ELKAY	ELUHAD121245	SINGLE-COMPARTMENT, STAINLESS STEEL SINK (ADA) FAUCET - CHICAGO 8595-317E2805 CUP STRAINER - ELKAY LK-35 SUPPLY - 3/8" ANGLE-TYPE WITH STOPS TRAP - 1 1/2" CAST BRASS WITH C.O. PLUG	2"	1 1/2"	1/2"	1/2"
P6A	ELKAY	ULHAD2133	DOUBLE-COMPARTMENT, STAINLESS STEEL SINK (ADA) FAUCET - CHICAGO 786-GN8AFCABCP CUP STRAINERS - (2) ELKAY LK-35 SUPPLY - 3/8" ANGLE-TYPE WITH STOPS TRAP - 1 1/2" CAST BRASS WITH C.O. PLUG	2"	1 1/2"	1/2"	1/2"
FS1	ZURN	Z-1750	STAINLESS STEEL FLOOR SINK, 12"X12"X6", PROVIDE FULL SIZE SS GRATE SEE FLOOR PLANS FOR DRAIN SIZES.	--	--	--	--
SA	ZURN	Z-1700 SERIES	WATER HAMMER ARRESTOR. SIZE PER P.D.I. WH-201 VERIFY THAT COMPONENT IS ACCESIBLE.	--	--	--	--

COLORADO LICENSED
STEVEN T ALSCHULER
0042034
PROFESSIONAL ENGINEER
6/17/2022

REVIEWED FOR CODE COMPLIANCE
11/08/2022

INDOOR ENVIRONMENTS USA
A LIMITED LIABILITY COMPANY
1920 13th STREET, SUITE B1
BOULDER, CO80302
720 742-1587

NOTICE: DUTY OF COOPERATION

Release of these plans contemplates further cooperation among the owner, his contractor and the architect. Design and construction are complex. Although the architect and his consultants have performed their services with due care and diligence, they cannot guarantee perfection. Communication is imperfect and every contingency cannot be anticipated. Any ambiguity or discrepancy discovered by the use of these plans shall be reported immediately to the architect. Failure to notify the architect compounds misunderstanding and increases construction costs. A failure to cooperate by a simple notice to the architect shall relieve the architect from responsibility for the consequences. Changes made from the plans without consent of the architect are unauthorized and shall relieve the architect of responsibility for all consequences arriving out of such changes.

All design, documents and data prepared by Eric Smith Associates, P.C. as instruments of service shall remain property of Eric Smith Associates, P.C. and shall not be copied, changed or disclosed in any form whatsoever without first obtaining the express written consent of Eric Smith Associates, P.C.

© Eric Smith Associates, P.C.

REVISIONS

No.	Description	Date

uchealth

YVMC MOUNTAIN CLINIC
2305 MOUNTER WERNER CIRCLE'
SUITE P.027
STEAMBOAT SPRINGS, COLORADO

ERIC SMITH ASSOCIATES, P.C.
1919 SEVENTH STREET
BOULDER, COLORADO, 80302
(303) 442-5458, (303) 442-4745 FAX

Job Number:	
Date:	06/20/22
Drawn By:	AS
Checked By:	JF

Project Phase

Sheet Title
PLUMBING LEGEND & SCHEDULE

Sheet Number
P6.1

REVIEWED FOR CODE COMPLIANCE
11/08/2022

ELECTRICAL SYMBOL LEGEND

SYMBOL	DESCRIPTION	HT AFF	SYMBOL	DESCRIPTION	HT AFF	SYMBOL	DESCRIPTION
48"	SWITCH SINGLE/TWO POLE			SMOKE DETECTOR CEILING MOUNTED	AS NOTED	A	SURFACE OR WALL MOUNTED LIGHT (TYPE DENOTED)
48"	SWITCH 3-WAY		RB	SMOKE DETECTOR CEILING MOUNTED RELAY BASE	AS NOTED		WALL MOUNTED EXTERIOR LIGHT (TYPE DENOTED)
48"	SWITCH 4-WAY		SC CO	SMOKE/CARBON MONOXIDE DETECTOR CEILING MOUNTED SELF CONTAINED		A	2X4 LIGHT FIXTURE RECESSED OR SURFACE MOUNTED AS SCHEDULED
48"	SWITCH KEYED	72"***	FA ANNUN	FIRE ALARM ANNUNCIATOR		A	2X2 LIGHT FIXTURE RECESSED OR SURFACE MOUNTED AS SCHEDULED
48"	SWITCH OCCUPANCY SENSOR	48"****	F	FIRE ALARM MANUAL PULL STATION		A	STRIP LIGHT (TYPE DENOTED)
48"	SWITCH SPEED CONTROL	84"**	F	FIRE ALARM HORN STROBE		A	SUSPENDED OR PENDANT LIGHT FIXTURE (TYPE DENOTED)
48"	SWITCH HORSEPOWER RATED			HEAT DETECTOR	96"	T1 T2	TRACK & TRACK LIGHTS (TYPE DENOTED)
48"	SWITCH TIMER		CO	CARBON MONOXIDE DETECTOR	96"	EM	EMERGENCY BATTERY LIGHT (TYPE DENOTED)
48"	SWITCH DIMMER		F	FIRE ALARM BELL & STROBE	96"	EMX	COMBINED BATTERY EMERGENCY & EXIT LIGHT (TYPE DENOTED)
48"	SWITCH WITH PILOT			FIRE FLAME DETECTOR	12"*	E EX	EXIT LIGHT (TYPE DENOTED)
48"	SWITCH PUSH BUTTON	84"**	N	NURSE CALL WALL MOUNT		1	KEYED NOTE (SEE SCHEDULE)
18"	RECEPTACLE SIMPLEX		N	NURSE CALL CEILING MOUNT			
18"	RECEPTACLE DUPLEX	AS NOTED		CAMERA			
18"	RECEPTACLE DUPLEX GFCI	AS NOTED		CAMERA PAN/TILT DRIVE			
18"	RECEPTACLE ABOVE COUNTER	48"***	CR	CARD READER			RECEPTACLE DUPLEX EXISTING
18"	RECEPTACLE 240/208V	84"		DOOR BUZZER			
18"	RECEPTACLE FOURPLEX	84"		DOOR CHIME			
18"	RECEPTACLE FOURPLEX GFCI	144"	MD	MOTION DETECTOR			
18"	RECEPTACLE DUPLEX HALF SWITCHED			DISCONNECT			
18"	RECEPTACLE DUPLEX SWITCHED			DISCONNECT FUSED			
18"	RECEPTACLE ISOLATED GROUND			MAG MOTOR STARTER OR CONTACTOR			
18"	RECEPTACLE DUPLEX FLOOR MOUNTED			COMBINATION MOTOR STARTER NON-FUSED			
AS NOTED	RECEPTACLE ON DROP CORD			COMBINATION MOTOR STARTER FUSED			
	RECEPTACLE DUPLEX EXISTING			VARIABLE FREQUENCY DRIVE			
	RECEPTACLE FOURPLEX EXISTING		M-1	MOTOR (SEE SCHEDULE)			
	DATA/TELEPHONE PLAIN						

ALL DISTANCES ARE TO CENTER OF DEVICE OR EQUIPMENT UNLESS OTHERWISE NOTED. DEVICES INDICATED AT 48" MAY NOT BE INSTALLED WITH ANY OPERABLE PART HIGHER THAN 48". DEVICES MAY BE INSTALLED IN CONCRETE MASONRY UNITS WITH THE TOP OF THE DEVICE AT 48".

* DISTANCE ABOVE TOP OF DOOR FRAME
** DISTANCE TO TOP OF EQUIPMENT OR DEVICE
*** DISTANCE TO HIGHEST OPERABLE PART OF EQUIPMENT
**** DISTANCE BELOW CEILING
***** DISTANCE TO BOTTOM OF DEVICE

ELECTRICAL SYMBOL NOTES

THE LIGHTING FIXTURE TYPE IS INDICATED BY AN UPPER CASE LETTER.
THE CIRCUIT DESIGNATION IS INDICATED BY A NUMBER.
THE SWITCH DESIGNATION IS INDICATED BY A LOWER CASE LETTER.

A2 / 12b — EXAMPLE 1: LIGHTING FIXTURE TYPE "A" IS CONNECTED TO CIRCUIT 12 AND CONTROLLED BY SWITCH "b".

* P2D/I * / 2aba — EXAMPLE 2: THE FIXTURE TYPE SHOWN AS A NUMERATOR INDICATES ALL LIGHTING FIXTURES IN THE ROOM OR SPACE ARE THE SAME TYPE. THE CIRCUIT NUMBER AND SWITCH DESIGNATION SHOWN AS A DENOMINATOR INDICATES ALL LIGHTING FIXTURES IN THE ROOM OR SPACE ARE CONNECTED TO THE SAME CIRCUIT, CONTROLLED BY THE SAME SWITCHES, CENTER/OUTBOARD MULTILEVEL SWITCHING.

E / 14 — EXIT LIGHTS. STEM INDICATES WALL MOUNTING. NO STEM INDICATES CEILING MOUNTING. SHADED AREA INDICATES ILLUMINATED FACE(S). ARROW INDICATES DIRECTIONAL ARROW ON ILLUMINATED FACE(S). THE CIRCUIT DESIGNATION IS INDICATED BY A NUMBER. EXAMPLE: THE WALL MOUNTED EXIT LIGHT TYPE "E" WITH SINGLE FACE AND DIRECTIONAL ARROW IS CONNECTED TO CIRCUIT 14.

16c — DEVICES. THE CIRCUIT DESIGNATION IS INDICATED BY A NUMBER. THE SWITCH DESIGNATION IS INDICATED BY A LOWER CASE LETTER. EXAMPLE: SPLIT DUPLEX RECEPTACLE IS CONNECTED TO CIRCUIT 16 AND ONE RECEPTACLE OUTLET IS CONTROLLED BY SWITCH "c".

D600 / e — THE CONTROL DEVICE DESIGNATION IS INDICATED BY A LOWER CASE LETTER. EXAMPLE: SINGLE POLE SWITCH "d" TO CONTROL LIGHTING FIXTURES INDICATED BY "d".

d — WALL BOX DIMMER WITH SIZE AS INDICATED AT DEVICE. EXAMPLE: 600 WATT WALL BOX DIMMER TO CONTROL LIGHTING FIXTURES INDICATED BY "e". SEE SPECIFICATIONS FOR WATTAGE IF NOT INDICATED.

1,3,5 — SPECIAL CONNECTIONS. THE EQUIPMENT IS INDICATED BY A NUMBER IN A CIRCLE. SEE THE MOTOR AND EQUIPMENT SCHEDULE FOR THE LOAD DESCRIPTION AND TYPE OF CONNECTION. THE CIRCUIT DESIGNATION IS INDICATED BY A NUMBER(S) ADJACENT TO THE SYMBOL. EXAMPLE: EQUIPMENT NO. 1; 3 PHASE CONNECTION TO CIRCUITS 1, 3, 5.

SF-1 / 2,4,6 — MOTOR CONNECTIONS. THE MOTOR IS INDICATED BY A NUMBER WITHIN OR CHARACTERS ADJACENT TO THE MOTOR SYMBOL. SEE THE MOTOR AND EQUIPMENT SCHEDULE FOR THE MOTOR DESCRIPTION AND ELECTRICAL REQUIREMENTS. THE CIRCUIT DESIGNATION IS INDICATED BY A NUMBER(S) ADJACENT TO THE SYMBOL. EXAMPLE: MOTOR SF-1; 3 PHASE CONNECTION TO CIRCUITS 2, 4, 6.

7,9 / H1 — ELECTRIC HEATER CONNECTIONS. THE HEATER TYPE IS INDICATED BY A NUMBER FOLLOWING THE UPPER CASE LETTER "H". SEE THE HEATER SCHEDULE FOR ELECTRICAL REQUIREMENTS. THE CIRCUIT DESIGNATION IS INDICATED BY A NUMBER(S) ADJACENT TO THE HEATER. EXAMPLE: ELECTRIC BASEBOARD HEATER TYPE "H1" CONNECTED TO CIRCUITS 7, 9.

T1 — TRANSFORMERS. THE TRANSFORMER TYPE IS INDICATED BY A NUMBER FOLLOWING THE UPPER CASE LETTER "T". SEE THE TRANSFORMER SCHEDULE OR THE SINGLE LINE DIAGRAM FOR THE TRANSFORMER DESCRIPTION AND REQUIREMENTS. EXAMPLE: TRANSFORMER TYPE "T1".

LPN-102 — PANELBOARDS. PANELBOARD DOORS MAY BE SHOWN TO INDICATE OPENING SIDE OF RECESSED PANELBOARDS. SEE PANELBOARD IDENTIFICATION FOR DESIGNATION CODES.

1 — SPECIAL NOTE. SEE THE SPECIAL NOTES ON THAT SHEET FOR THE NOTE NUMBER INDICATED IN THE HEXAGON.

CONDUIT SHOWN WITHOUT SLASH MARKS SHALL CONTAIN 2 # 12 CONDUCTORS IN 3/4" CONDUIT UNLESS SPECIFIC EQUIPMENT REQUIRES A DIFFERENT SIZE.

#10 — CONDUIT SHOWN WITH SLASH MARKS SHALL CONTAIN 1 # 12 CONDUCTOR PER SLASH MARK IN 3/4" CONDUIT UNLESS A CONDUCTOR AND CONDUIT SIZE IS SHOWN ADJACENT TO THE SLASH MARKS. SLASH MARK INDICATORS ARE: SHORT STRAIGHT=PHASE CONDUCTOR, LONG STRAIGHT=NEUTRAL CONDUCTOR, SHORT BENT ENDED=SWITCH LEGS, LONG STRAIGHT WITH A DOT=GROUND CONDUCTOR, CHEVRON=CATEGORY 6, HALF CHEVRON=CATEGORY 3, TWIST=SHIELDED TWISTED PAIR, CONCENTRIC CIRCLE AND DOT=COAX CABLE.

HOME RUN TO BRANCH CIRCUIT PANELBOARD. THE PANELBOARD DESIGNATION IS SHOWN ADJACENT TO THE HOME RUN ARROW AS A NUMERATOR AND THE CIRCUIT DESIGNATION IS SHOWN AS THE DENOMINATOR. CIRCUIT BREAKER SIZES (AMPS/NUMBER OF POLES) ARE SHOWN IN THE PANELBOARD SCHEDULE WITH THE CORRESPONDING PANELBOARD AND CIRCUIT DESIGNATION. EXAMPLE: HOME RUN TO PANELBOARD LPN-102; CIRCUITS 1, 3, 5.

LPN-102 / 1,3,5 — SYMBOL NOTATIONS: UPPER CASE LETTERS ADJACENT TO SYMBOLS INDICATE A UNIT TYPE. SEE APPROPRIATE SCHEDULE OR SPECIFICATIONS.

ELECTRICAL ABBREVIATIONS LIST

1P	1 POLE (2P, 3P, 4P, ETC.)
A	AMPERE
AC	ABOVE COUNTER OR AIR CONDITIONER
ACLG	ABOVE CEILING
ADO	AUTOMATIC DOOR OPENER
AF	AMP FRAME
AFF	ABOVE FINISHED FLOOR
AFG	ABOVE FINISHED GRADE
AFI	ARC FAULT CIRCUIT INTERRUPTER
AHU	AIR HANDLING UNIT
AL	ALUMINUM
ALT	ALTERNATE
AMP	AMPERE
AMPL	AMPLIFIER
ANNUN	ANNUNCIATOR
APPROX	APPROXIMATELY
AQ-STAT	AQUASTAT
ARCH	ARCHITECT, ARCHITECTURAL
AS	AMP SWITCH
AT	AMP TRIP
ATS	AUTOMATIC TRANSFER SWITCH
AUTO	AUTOMATIC
AUX	AUXILIARY
AV	AUDIO VISUAL
AWG	AMERICAN WIRE GAUGE
BATT	BATTERY
BD	BOARD
BLDG	BUILDING
BMS	BUILDING MANAGEMENT SYSTEM
C	CONDUIT
CAB	CABINET
CAT	CATALOG
CATV	CABLE TELEVISION
CB	CIRCUIT BREAKER
CCTV	CLOSED CIRCUIT TELEVISION
CKT	CIRCUIT
CLG	CEILING
COMB	COMBINATION
CMPR	COMPRESSOR
CONN	CONNECTION
CONST	CONSTRUCTION
CONT	CONTINUATION OR CONTINUOUS
CONTR	CONTRACTOR
CONV	CONVECTOR
CP	CIRCULATING PUMP
CRT	CATHODE-RAY TUBE
CT	CURRENT TRANSFORMER
CTR	CENTER
CU	COPPER
DCP	DOMESTIC WATER CIRCULATING PUMP
DEPT	DEPARTMENT
DET	DETAIL
DIA	DIAMETER
DISC	DISCONNECT
DIST	DISTRIBUTION
DN	DOWN
DPR	DAMPER
DS	SAFETY DISCONNECT SWITCH
DT	DOUBLE THROW
DWG	DRAWING
EC	ELECTRICAL CONTRACTOR
ELEC	ELECTRIC, ELECTRICAL
ELEV	ELEVATOR
EM	EMERGENCY
EMS	ENERGY MANAGEMENT SYSTEM
EMT	ELECTRICAL METALLIC TUBING
EP	ELECTRIC PNEUMATIC
EQUIP	EQUIPMENT
EWC	ELECTRIC WATER COOLER
EXIST	EXISTING
EXH	EXHAUST
EXP	EXPLOSION PROOF
FA	FIRE ALARM
FABP	FIRE ALARM BOOSTER POWER SUPPLY PANEL
FACP	FIRE ALARM CONTROL PANEL
FCU	FAN COIL UNIT
FIXT	FIXTURE
FLR	FLOOR
FLUOR	FLUORESCENT
FU	FUSE
FUDS	FUSED SAFETY DISCONNECT SWITCH
GA	GAUGE
GAL	GALLON
GALV	GALVANIZED
GC	GENERAL CONTRACTOR
GEN	GENERATOR
GFI	GROUND FAULT CIRCUIT INTERRUPTER
GFP	GROUND FAULT PROTECTOR
GND	GROUND
GRS	GALVANIZED RIGID STEEL (CONDUIT)
GYP BD	GYPSUM BOARD
HOA	HANDS-OFF-AUTOMATIC SWITCH
HORIZ	HORIZONTAL
HP	HORSEPOWER
HPF	HIGH POWER FACTOR
HT	HEIGHT
HTG	HEATING
HTR	HEATER
HV	HIGH VOLTAGE
HVAC	HEATING, VENTILATING AND AIR CONDITIONING
HWP	HYDRONIC WATER PUMP
IC	INTERRUPTING CAPACITY
IG	ISOLATED GROUND
IMC	INTERMEDIATE METAL CONDUIT
INCAND	INCANDESCENT
IR	INFRARED
IW	INTERLOCK WITH
J-BOX	JUNCTION BOX
KV	KILOVOLT
KVA	KILOVOLT-AMPERE
KVAR	KILOVOLT-AMPERE REACTIVE
KW	KILOWATT
KWH	KILOWATT HOUR
LOC	LOCATE OR LOCATION
LT	LIGHT
LTG	LIGHTING
LTNG	LIGHTNING
LV	LOW VOLTAGE
MAX	MAXIMUM
MAG.S	MAGNETIC STARTER
M/C	MOMENTARY CONTACT
MC	MECHANICAL CONTRACTOR
MCB	MAIN CIRCUIT BREAKER
MCC	MOTOR CONTROL CENTER
MDC	MAIN DISTRIBUTION CENTER
MDP	MAIN DISTRIBUTION PANEL
MFR	MANUFACTURER
MFS	MAIN FUSED DISCONNECT
MH	MANHOLE
MIC	MICROPHONE
MIN	MINIMUM
MISC	MISCELLANEOUS
MLO	MAIN LUGS ONLY
MMS	MANUAL MOTOR STARTER
MOA	MULTIOUTLET ASSEMBLY
MSP	MOTOR STARTER PANELBOARD
MSBD	MAIN SWITCHBOARD
MT	MOUNT
MT.C	EMPTY CONDUIT
MTS	MANUAL TRANSFER SWITCH
MTR	MOTOR, MOTORIZED
N.C.	NORMALLY CLOSED
NEC	NATIONAL ELECTRICAL CODE
NEMA	NATIONAL ELECTRICAL MANUFACTURERS ASSOCIATION
NFDS	NON-FUSED SAFETY DISCONNECT SWITCH
NIC	NOT IN CONTRACT
NL	NIGHT LIGHT
N.O.	NORMALLY OPEN
NPF	NORMAL POWER FACTOR
NTS	NOT TO SCALE
OH	OVERHEAD
OL	OVERLOADS
PA	PUBLIC ADDRESS
PB	PULL BOX OR PUSHBUTTON
PE	PNEUMATIC ELECTRIC
PED	PEDESTAL
PF	POWER FACTOR
PH	PHASE
PIV	POST INDICATING VALVE
PNL	PANEL
PP	POWER POLE
PR	PAIR
PRI	PRIMARY
PROJ	PROJECTION
PRV	POWER ROOF VENTILATOR
PT	POTENTIAL TRANSFORMER
PVC	POLYVINYL CHLORIDE (CONDUIT)
PWR	POWER
QUAN	QUANTITY
RCPT	RECEPTACLE
REQD	REQUIRED
RM	ROOM
RSC	RIGID STEEL CONDUIT
RTU	ROOF TOP UNIT
SC	SURFACE CONDUIT
SEC	SECONDARY
SHT	SHEET
SIM	SIMILAR
S/N	SOLID NEUTRAL
SPEC	SPECIFICATION
SPKR	SPEAKER
SP	SPARE
SR	SURFACE RACEWAY
SS	STAINLESS STEEL
SSW	SELECTOR SWITCH
S/S	STOP/START PUSHBUTTONS
STA	STATION
STD	STANDARD
SURF	SURFACE MOUNTED
SW	SWITCH
SWBD	SWITCHBOARD
SYM	SYMMETRICAL
SYS	SYSTEM
TEL	TELEPHONE
TEL/DATA	TELEPHONE/DATA
TERM	TERMINAL
TL	TWIST LOCK
TR	TAMPER RESISTANT
T-STAT	THERMOSTAT
TTC	TELEPHONE TERMINAL CABINET
TV	TELEVISION
TVTC	TELEVISION TERMINAL CABINET
TYP	TYPICAL
UC	UNDER COUNTER
UE	UNDERGROUND ELECTRICAL
UG	UNDERGROUND
UH	UNIT HEATER
UT	UNDERGROUND TELEPHONE
UTIL	UTILITY
UV	UNIT VENTILATOR OR ULTRAVIOLET
V	VOLT
VA	VOLT-AMPERES
VDT	VIDEO DISPLAY TERMINAL
VERT	VERTICAL
VFD	VARIABLE FREQUENCY DRIVE
VOL	VOLUME
W	WATT
W/	WITH
WG	WIRE GUARD
WH	WATER HEATER
W/O	WITHOUT
WP	WEATHERPROOF
XFMR	TRANSFORMER
XFR	TRANSFER
∠	ANGLE
@	AT
△	DELTA
'	FEET
"	INCHES
#	NUMBER
Ø	PHASE
C	CENTER LINE
P	PLATE

SPECIFIC CODE NOTES

FIRE PROTECTION REQUIREMENTS

A. PENETRATIONS IN WALLS REQUIRING PROTECTED OPENINGS MUST BE FIRESTOPPED WITH AN APPROVED MATERIAL.
   1. CONDUITS MAY PENETRATE WALLS OR PARTITIONS, PROVIDED THEY ARE FIRE-STOPPED.
   2. OPENINGS FOR STEEL ELECTRICAL BOXES NOT EXCEEDING 16 SQUARE INCHES ARE PERMITTED PROVIDED OPENINGS DO NOT AGGREGATE MORE THAN 100 SQUARE INCHES FOR ANY 100 SQUARE FEET OF WALL OR PARTITION.
   3. OUTLET BOXES ON OPPOSITE SIDES OF WALLS OR PARTITIONS MUST BE SEPARATED BY A HORIZONTAL DISTANCE OF 24 INCHES.

B. LIGHT FIXTURES AND OTHER APPARATUS SUPPORTED BY THE ACOUSTICAL CEILING GRID MUST MEET THE REQUIREMENTS OF NEC SECTION 410.16, MEANS OF SUPPORT.

C. RECESSED LIGHTING FIXTURES INSTALLED IN FIRE RATED CEILING ASSEMBLIES SHALL BE FIRE RATED FIXTURES BEARING THE UL FIRE RATED LABEL. FIXTURES SHALL BE INSTALLED IN ACCORDANCE WITH THE UL FIRE RESISTANCE DIRECTORY, AND SHALL INCLUDE A FIRE RATED ENCLOSURE INSTALLED OVER THE FIXTURE THAT MEETS THE REQUIREMENTS OF THE UL FIRE RESISTANCE DIRECTORY.

GENERAL ELECTRICAL NOTES

A. ALL RECEPTACLES SHALL BE TAMPER RESISTANT TYPE RECEPTACLES.
B. FIRE ALARM SYSTEM TO BE DESIGN-BUILD BY THE ELECTRICAL CONTRACTOR.
C. THE ELECTRICAL CONTRACTOR SHALL REMOVE ALL EXISTING ELECTRICAL DEVICES AS REQUIRED FOR REMODELING. NO ATTEMPT HAS BEEN MADE TO VERIFY ELECTRICAL DEVICES THAT HAVE TO BE REMOVED, ELECTRICAL CONTRACTOR TO FIELD VERIFY ALL EXISTING CONDITIONS/ELECTRICAL ITEMS TO BE REMOVED.

ELECTRICAL DRAWING INDEX

Sheet Number	Sheet Name
E-0.00	ABBREVIATIONS, SYMBOLS & NOTES
E-2.01	ELECTRICAL LIGHTING PLAN
E-3.01	ELECTRICAL POWER PLAN
E-4.01	ELECTRICAL SCHEDULES & DETAILS
E-4.02	ELECTRICAL 1-LINE DIAGRAM
E-5.01	ELECTRICAL SPECIFICATIONS

COLORADO LICENSED
DAVID A. EKE
55707
JUNE 17, 2022
PROFESSIONAL ENGINEER

INDOOR ENVIRONMENTS USA LIMITED LIABILITY COMPANY

NOTICE: DUTY OF COOPERATION

Release of these plans contemplates further cooperation among the owner, his contractor and the architect. Design and construction are complex. Although the architect and his consultants have performed their services with due care and diligence, they cannot guarantee perfection. Communication is imperfect and every contingency cannot be anticipated. Any ambiguity or discrepancy discovered by the use of these plans shall be reported immediately to the architect. Failure to notify the architect compounds misunderstanding and increases construction costs. A failure to cooperate by a simple notice to the architect shall relieve the architect from responsibility for the consequences. Changes made from the plans without consent of the architect are unauthorized and shall relieve the architect of responsibility for all consequences arriving out of such changes.

All design, documents and data prepared by Eric Smith Associates, P.C. as instruments of service shall remain property of Eric Smith Associates, P.C. and shall not be copied, changed or disclosed in any form whatsoever without first obtaining the express written consent of Eric Smith Associates, P.C.

© Eric Smith Associates, P.C.

REVISIONS

No.	Description	Date

uchealth

YVMC MOUNTAIN CLINIC
2305 MOUNTER WERNER CIRCLE
SUITE P.0217
STEAMBOAT SPRINGS, CO

ERIC SMITH ASSOCIATES, P.C.
1919 SEVENTH STREET
BOULDER, COLORADO, 80302
(303) 442-5456, (303) 442-4745 FAX

Job Number:	60931
Date:	JUNE 17, 2022
Drawn By:	DAE
Checked By:	DAE

Project Phase: CONSTRUCTION DOCUMENTS

Sheet Title: ABBREVIATIONS, SYMBOLS & NOTES

Sheet Number: E-0.00

FILE:
6/21/2022 8:35:46 AM

REVIEWED FOR CODE COMPLIANCE
11/08/2022

LIGHTING FIXTURE SCHEDULE

ID	MANUFACTURER	CATALOG NUMBER	DESCRIPTION	LAMP	Voltage Nominal	Apparent Load	COMMENTS	QTY
A	LITHONIA	2TL4-40L-FW-A19-GZ10-LP835	2X4 RECESSED LED FLUSH ALUMINUM DOOR. MATCH CEILING TRIM.	LED	120 V	44 VA		10
B	LITHONIA	2TL4-40L-FW-A19-GZ10-LP835	2X2 RECESSED LED FLUSH ALUMINUM DOOR. MATCH CEILING TRIM.	LED	120 V	31 VA	<varies>	4
B1	LITHONIA	2TL4-40L-FW-A19-GZ10-LP835	2X2 RECESSED LED FLUSH ALUMINUM DOOR. MATCH CEILING TRIM.	LED	120 V	31 VA	<varies>	5
C	GOTHAM	EV04-35/20-AR-WD-LD-MVOLT-GZ10	6" RECESSED CAN, I.C. RATED, AIR TIGHT	LED	120 V	11 VA		5
EX	COMPASS	CELS	EDGELIT EXIT SIGN. CONFIGURATIONS PER DRAWINGS. FINISH BY ARCHITECT.	LED	120 V	2 VA		3

ELECTRICAL KEYED NOTES

1. CONNECT SWITCH TO SOLENOID SHUTOFF VALVES ON WATER LINES ABOVE BATHROOM. CIRCUIT FROM LIGHT CIRCUIT. COORDINATE LOCATION OF SWITCH AND VALVES WITH OWNER'S REPRESENTATIVE AND PLUMBING CONTRACTOR.

COMcheck Software Version 4.1.5.3
Interior Lighting Compliance Certificate

Project Information

Energy Code: 2012 IECC
Project Title: YVMC Mountain Clinic
Project Type: New Construction

Construction Site:
2305 Mountor Werner Circle, Ste P.0217
Steamboat Springs, CO

Owner/Agent:

Designer/Contractor:

Additional Efficiency Package(s)

Credits: 1.0 Required 0.0 Proposed

Allowed Interior Lighting Power

A Area Category	B Floor Area (ft2)	C Allowed Watts / ft2	D Allowed Watts (B X C)
1-Exam/Office (Health care clinic)	1225	1.00	1225
		Total Allowed Watts =	1225

Proposed Interior Lighting Power

A Fixture ID : Description / Lamp / Wattage Per Lamp / Ballast	B Lamps/ Fixture	C # of Fixtures	D Fixture Watt.	E (C X D)
1-Exam/Office (Health care clinic)				
LED 1: LED Linear 33W:	1	10	44	440
LED 2: LED Linear 33W:	1	9	31	279
LED 3: LED PAR 11W:	1	5	11	55
		Total Proposed Watts =		774

Interior Lighting PASSES: Design 37% better than code

Interior Lighting Compliance Statement

Compliance Statement: The proposed interior lighting design represented in this document is consistent with the building plans, specifications, and other calculations submitted with this permit application. The proposed interior lighting systems have been designed to meet the 2012 IECC requirements in COMcheck Version 4.1.5.3 and to comply with any applicable mandatory requirements listed in the Inspection Checklist.

David A. Exe, PE — Name - Title
Signature
June 17, 2022 — Date

Project Title: YVMC Mountain Clinic — Report date: 06/20/22
Data filename: O:\projects\60500 Indoor Environments USA\60531 UC Health Clinic Steamboat\Lighting\60531 YVMC Mountor Clinic.cck — Page 1 of 7

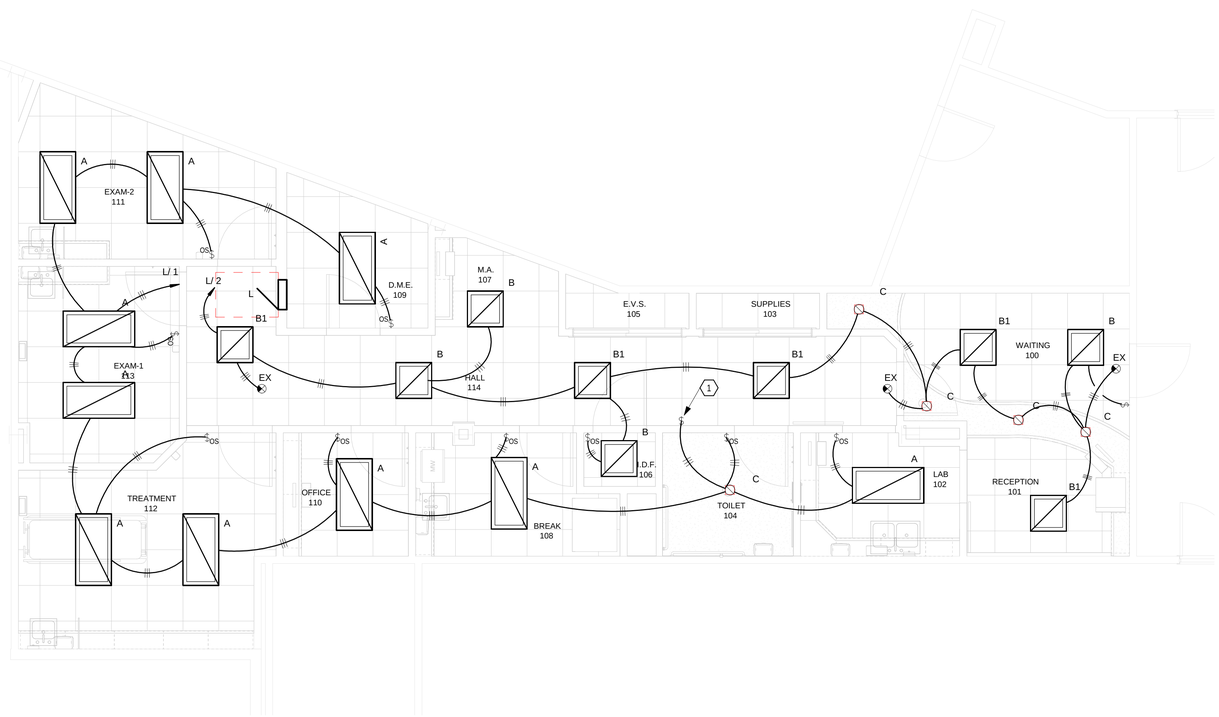

1 / E-2.01 ELECTRICAL REFLECTED CEILING PLAN
1/4" = 1'-0"

COLORADO LICENSED
DAVID A. EXE
55707
JUNE 17, 2022
PROFESSIONAL ENGINEER

INDOOR ENVIRONMENTS USA LIMITED LIABILITY COMPANY

NOTICE: DUTY OF COOPERATION

Release of these plans contemplates further cooperation among the owner, his contractor and the architect. Design and construction are complex. Although the architect and his consultants have performed their services with due care and diligence, they cannot guarantee perfection. Communication is imperfect and every contingency cannot be anticipated. Any ambiguity or discrepancy discovered by the use of these plans shall be reported immediately to the architect. Failure to notify the architect compounds misunderstanding and increases construction costs. A failure to cooperate by a simple notice to the architect shall relieve the architect from responsibility for the consequences. Changes made from the plans without consent of the architect are unauthorized and shall relieve the architect of responsibility for all consequences arising out of such changes.

All design, documents and data prepared by Eric Smith Associates, P.C. as instruments of service shall remain property of Eric Smith Associates, P.C. and shall not be copied, changed or disclosed in any form whatsoever without first obtaining the express written consent of Eric Smith Associates, P.C.

© Eric Smith Associates, P.C.

REVISIONS

No.	Description	Date

uchealth

YVMC MOUNTAIN CLINIC
2305 MOUNTER WERNER CIRCLE
SUITE P.0217
STEAMBOAT SPRINGS, CO

ERIC SMITH ASSOCIATES, P.C.
1919 SEVENTH STREET
BOULDER, COLORADO, 80302
(303) 442-5456, (303) 442-4745 FAX

Job Number:	60531
Date:	JUNE 17, 2022
Drawn By:	DAE
Checked By:	DAE

Project Phase
CONSTRUCTION DOCUMENTS

Sheet Title
ELECTRICAL LIGHTING PLAN

Sheet Number
E-2.01

FILE:
12/21/2022 8:35:47 AM

REVIEWED FOR CODE COMPLIANCE
11/08/2022

ELECTRICAL/MECHANICAL EQUIPMENT SCHEDULE

ID	MANUFACTURER	CATALOG NUMBER	DESCRIPTION	VOLTAGE	PANEL	CURRENT	CIRCUIT	# POLES	CIRCUIT PROTECTION	CONDUIT & WIRE	DISCONNECT	COMMENTS
EF-1	GREENHECK	CSP-A200-QD	EXHAUST FAN	120 V	L	1 A	2	1	20 A	#12	30 A	

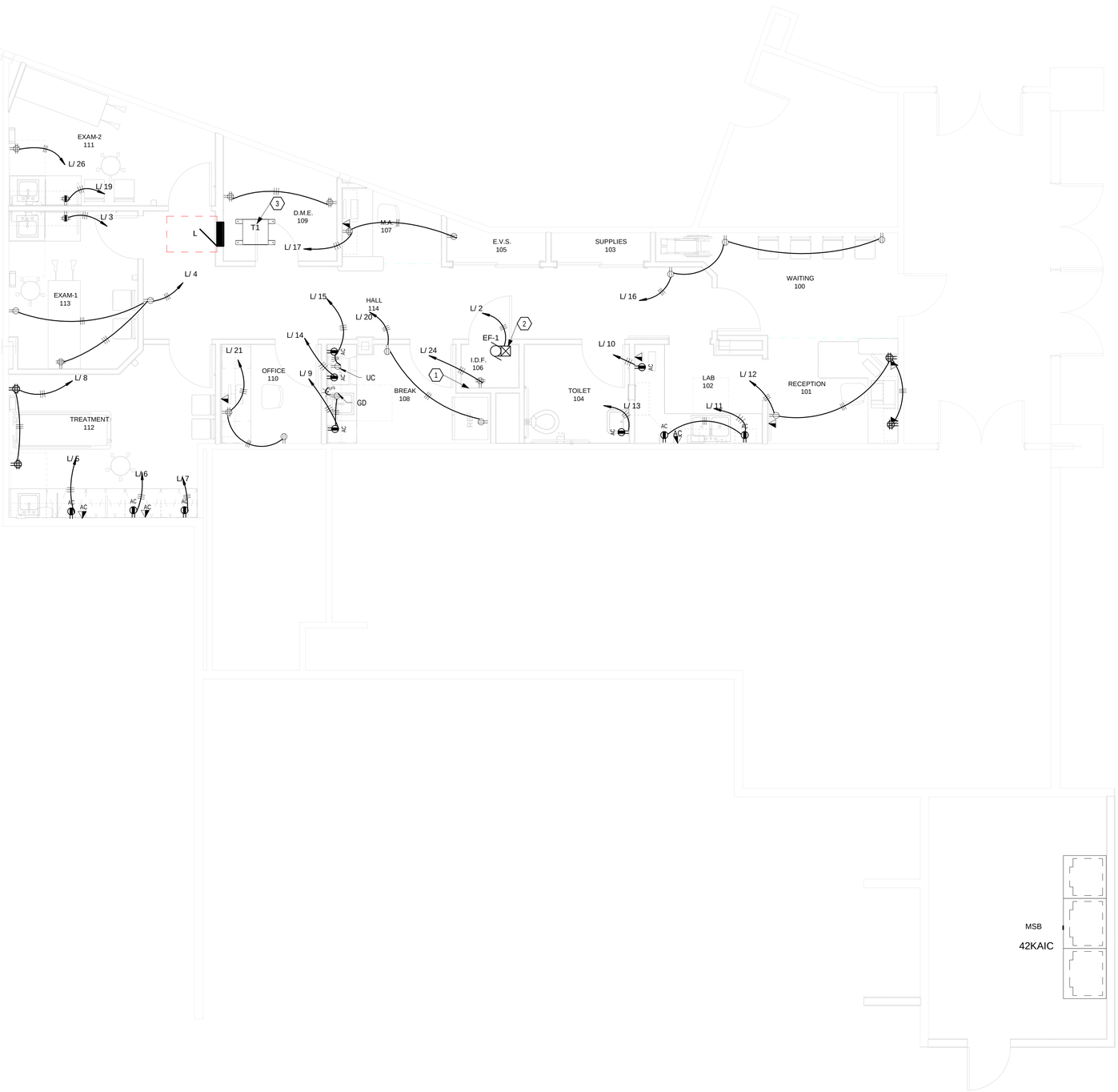

1 ELECTRICAL POWER PLAN
E-3.01

ELECTRICAL KEYED NOTES

1. PROVIDE 4'X4'X3/4" PLYWOOD ON BACK WALL AT CEILING .
2. CIRCUIT WITH LIGHTS. CIRCUIT TO LINE VOLTAGE THERMOSTAT PROVIDED BY MECHANICAL. COORDINATE WITH MECHANICAL FOR LOCATION.
3. CIRCUIT TRANSFORMER TO MSB LOCATED IN ELECTRICAL ROOM. TRANSFORMER TO BE MOUNTED FROM CEILING STRUCTURE IN CEILING CAVITY ABOVE RM 109. PROVIDE ACCESS.

COLORADO LICENSED
DAVID A. EKE
55707
JUNE 17, 2022
PROFESSIONAL ENGINEER

INDOOR ENVIRONMENTS USA LIMITED LIABILITY COMPANY

NOTICE: DUTY OF COOPERATION

Release of these plans contemplates further cooperation among the owner, his contractor and the architect. Design and construction are complex. Although the architect and his consultants have performed their services with due care and diligence, they cannot guarantee perfection. Communication is imperfect and every contingency cannot be anticipated. Any ambiguity or discrepancy discovered by the use of these plans shall be reported immediately to the architect. Failure to notify the architect compounds misunderstanding and increases construction costs. A failure to cooperate by a simple notice to the architect shall relieve the architect from responsibility for the consequences. Changes made from the plans without consent of the architect are unauthorized and shall relieve the architect of responsibility for all consequences arriving out of such changes.

All design, documents and data prepared by Eric Smith Associates, P.C. as instruments of service shall remain property of Eric Smith Associates, P.C. and shall not be copied, changed or disclosed in any form whatsoever without first obtaining the express written consent of Eric Smith Associates, P.C.

© Eric Smith Associates, P.C.

REVISIONS

No.	Description	Date

uchealth

YVMC MOUNTAIN CLINIC
2305 MOUNTER WERNER CIRCLE
SUITE P.0217
STEAMBOAT SPRINGS, CO

ERIC SMITH ASSOCIATES, P.C.
1919 SEVENTH STREET
BOULDER, COLORADO, 80302
(303) 442-5458, (303) 442-4745 FAX

Job Number:	60531
Date:	JUNE 17, 2022
Drawn By:	DAE
Checked By:	DAE

Project Phase
CONSTRUCTION DOCUMENTS

Sheet Title
ELECTRICAL POWER PLAN

Sheet Number
E-3.01

FILE:
6/21/2022 8:35:49 AM

REVIEWED FOR CODE COMPLIANCE
11/08/2022

TRANSFORMER SCHEDULE

XFMR	LOCATION	PROVIDED BY	KVA RATING	PRIMARY CONDUCTORS	PRIMARY VOLTAGE	SECONDARY CONDUCTORS	SECONDARY VOLTAGE	TOTAL LOAD	ENCLOSURE	MOUNTING	FED FROM	WEIGHT
T1	D.M.E. 109	ELECTRICAL CONTRACTOR	30KVA	#6	480 V/3-0 VA	#3	120/208V/WYE	9156 VA	Type 1	Ceiling Bracket	MSB	335 LB

Branch Panel: L

Location: HALL 114
Supply From: T1
Mounting: Recessed
Enclosure: Type 1

Volts: 120/208 Wye
Phases: 3
Wires: 4

A.I.C. Rating: 10KAIC
Mains Type: MCB
Mains Rating: 100 A
MCB Rating: 100 A

Notes:

CKT	Circuit Description	Trip	Poles	A		B		C		Poles	Trip	Circuit Description	CKT
1	ME-Lighting LAB 102	20 A	1	451 VA	431 VA					1	20 A	ME-Lighting HALL 114	2
3	Receptacle EXAM-1 113	20 A	1			360 VA	720 VA			1	20 A	Receptacle EXAM-1 113	4
5	Receptacle TREATMENT 112	20 A	1					180 VA	180 VA	1	20 A	Receptacle TREATMENT 112	6
7	Receptacle TREATMENT 112	20 A	1	180 VA	720 VA					1	20 A	Receptacle TREATMENT 112	8
9	Receptacle BREAK 108	20 A	1			360 VA	180 VA			1	20 A	Receptacle LAB 102	10
11	Receptacle LAB 102	20 A	1					360 VA	900 VA	1	20 A	Receptacle RECEPTION 101	12
13	Receptacle TOILET 104	20 A	1	180 VA	180 VA					1	20 A	Receptacle BREAK 108	14
15	Receptacle BREAK 108	20 A	1			360 VA	180 VA			1	20 A	Receptacle HALL 114	16
17	Receptacle M.A. 107	20 A	1					540 VA	720 VA	1	20 A	Receptacle M.A. 107	18
19	Receptacle EXAM-2 111	20 A	1	360 VA	360 VA					1	20 A	Receptacle BREAK 108	20
21	Receptacle OFFICE 110	20 A	1			540 VA							22
23									360 VA	1	20 A	Receptacle IDF 106	24
25	Spare	20 A	1	0 VA	360 VA					1	20 A	Receptacle EXAM-2 111	26
27	Spare	20 A	1			0 VA	0 VA			1	20 A	Spare	28
29	Spare	20 A	1					0 VA	0 VA	1	20 A	Spare	30
31	Spare	20 A	1	0 VA	0 VA					1	20 A	Spare	32
33	Spare	20 A	1			0 VA	0 VA			1	20 A	Spare	34
35	Spare	20 A	1					0 VA	0 VA	1	20 A	Spare	36
37	Spare	20 A	1	0 VA	0 VA					1	20 A	Spare	38
39	Spare	20 A	1			0 VA	0 VA			1	20 A	Spare	40
41	Spare	20 A	1					0 VA	0 VA	1	20 A	Spare	42
			Total Load:	3217 VA		2700 VA		3240 VA					
			Total Amps:	27 A		23 A		28 A					

Legend:

Load Classification	Connected Load	Demand Factor	Estimated Demand	Panel Totals	
Other	0 VA	0.00%	0 VA		
Receptacle	8280 VA	100.00%	8280 VA	**Total Conn. Load:**	9156 VA
Lighting	61 VA	100.00%	61 VA	**Total Est. Demand:**	9360 VA
MTR	120 VA	125.00%	150 VA	**Total Conn.:**	25 A
ME-Lighting	719 VA	125.00%	899 VA	**Total Est. Demand:**	26 A

Notes:

COLORADO LICENSED
DAVID A. EKE
55707
JUNE 17, 2022
PROFESSIONAL ENGINEER

INDOOR ENVIRONMENTS USA LIMITED LIABILITY COMPANY

NOTICE: DUTY OF COOPERATION

Release of these plans contemplates further cooperation among the owner, his contractor and the architect. Design and construction are complex. Although the architect and his consultants have performed their services with due care and diligence, they cannot guarantee perfection. Communication is imperfect and every contingency cannot be anticipated. Any ambiguity or discrepancy discovered by the use of these plans shall be reported immediately to the architect. Failure to notify the architect compounds misunderstanding and increases construction costs. A failure to cooperate by a simple notice to the architect shall relieve the architect from responsibility for the consequences. Changes made from the plans without consent of the architect are unauthorized and shall relieve the architect of responsibility for all consequences arriving out of such changes.

All design, documents and data prepared by Eric Smith Associates, P.C. as instruments of service shall remain property of Eric Smith Associates, P.C. and shall not be copied, changed or disclosed in any form whatsoever without first obtaining the express written consent of Eric Smith Associates, P.C.

© Eric Smith Associates, P.C.

REVISIONS

No.	Description	Date

uchealth

YVMC MOUNTAIN CLINIC
2305 MOUNTER WERNER CIRCLE
SUITE P.0217
STEAMBOAT SPRINGS, CO

ERIC SMITH ASSOCIATES, P.C.
1919 SEVENTH STREET
BOULDER, COLORADO, 80302
(303) 442-5458, (303) 442-4745 FAX

Job Number:	60531
Date:	JUNE 17, 2022
Drawn By:	DAE
Checked By:	DAE

Project Phase
CONSTRUCTION DOCUMENTS

Sheet Title
ELECTRICAL SCHEDULES & DETAILS

Sheet Number
E-4.01

FILE:
6/21/2022 8:35:50 AM

REVIEWED FOR CODE COMPLIANCE
11/08/2022

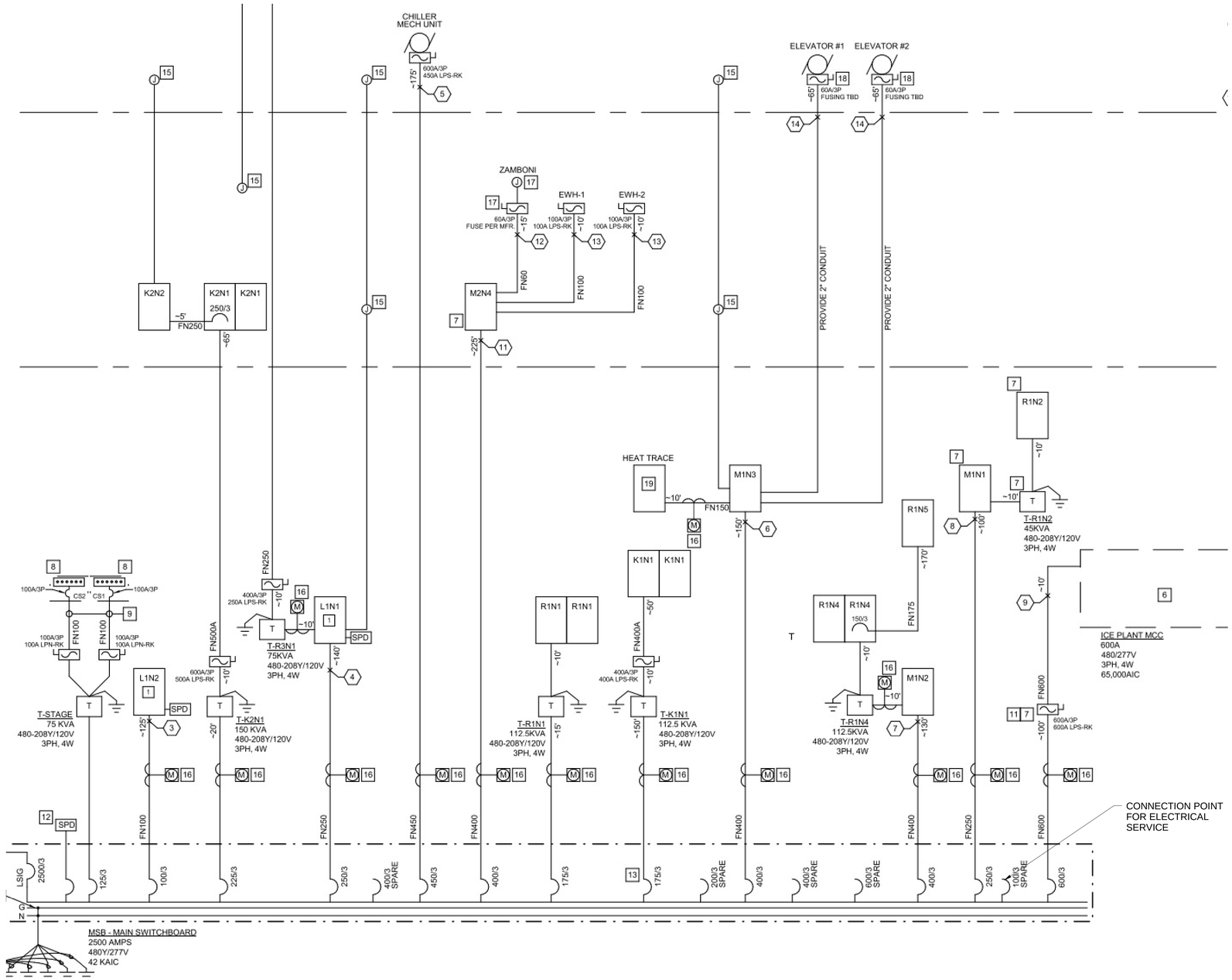

2 E-4.02 EXISTING 1-LINE DIAGRAM AS-BUILT
3/16" = 1'-0"

ELECTRICAL KEYED NOTES

1. CONTRACTOR TO PROVIDE 45A/3P BREAKER IN MSB IN OPEN SPACE OR REPLACE EXISTING 100A BREAKER. CIRCUIT TO T1 WITH 1"C,(4) #6THHN CU + #10 CU GND. PROVIDE E-GAUGE PRO SERIES METERING FOR PANEL FEEDER. METERING POINT CAN SHARE A COMMON METER PROVIDED ALL LOAD IS MONITORED ON EACH PANEL. CIRCUIT TRANSFORMER "T" TO PANEL "L" WITH 1 1/2"C,(4)#3 THHN CU + #8 CU GND

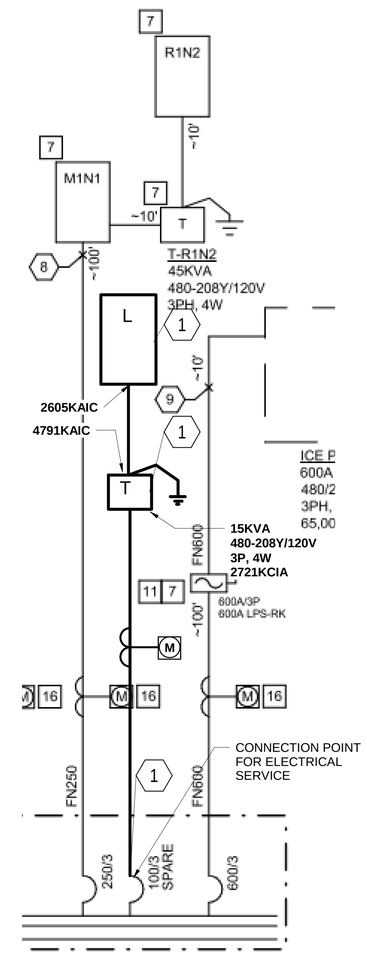

1 E-4.02 EXISTING 1-LINE DIAGRAM AS-BUILT Copy 1
1/4" = 1'-0"

COLORADO LICENSED
DAVID A. BYE
55707
JUNE 17, 2022
PROFESSIONAL ENGINEER

INDOOR ENVIRONMENTS USA LLC

NOTICE: DUTY OF COOPERATION

Release of these plans contemplates further cooperation among the owner, his contractor and the architect. Design and construction are complex. Although the architect and his consultants have performed their services with due care and diligence, they cannot guarantee perfection. Communication is imperfect and every contingency cannot be anticipated. Any ambiguity or discrepancy discovered by the use of these plans shall be reported immediately to the architect. Failure to notify the architect compounds misunderstanding and increases construction costs. A failure to cooperate by a simple notice to the architect shall relieve the architect from responsibility for the consequences. Changes made from the plans without consent of the architect are unauthorized and shall relieve the architect of responsibility for all consequences arriving out of such changes.

All design, documents and data prepared by Eric Smith Associates, P.C. as instruments of service shall remain property of Eric Smith Associates, P.C. and shall not be copied, changed or disclosed in any form whatsoever without first obtaining the express written consent of Eric Smith Associates, P.C.

© Eric Smith Associates, P.C.

REVISIONS

No.	Description	Date

uchealth

YVMC MOUNTAIN CLINIC
2305 MOUNTER WERNER CIRCLE
SUITE P.0217
STEAMBOAT SPRINGS, CO

ERIC SMITH ASSOCIATES, P.C.
1919 SEVENTH STREET
BOULDER, COLORADO, 80302
(303) 442-5458, (303) 442-4745 FAX

Job Number:	60531
Date:	JUNE 17, 2022
Drawn By:	Author
Checked By:	Checker

Project Phase
CONSTRUCTION DOCUMENTS

Sheet Title
ELECTRICAL 1-LINE DIAGRAM

Sheet Number
E-4.02

FILE:
6/21/2022 8:35:50 AM

ELECTRICAL SPECIFICATION

GENERAL REQUIRMENTS

1. GENERAL:

A. BEFORE SUBMITTING A PROPOSAL FOR THE WORK FOR THESE SPECIFICATIONS AND DRAWINGS, EACH BIDDER SHALL EXAMINE THE SITE AND FAMILIARIZE THEMSELVES WITH ALL CONDITIONS INCLUDING BUT NOT LIMITED TO UTILITY SERVICE, LOCATIONS, MATERIALS, AND DEMOLITION THAT AFFECT THE WORK AND COST THEREOF. NO EXTRA COMPENSATION WILL BE ALLOWED BECAUSE OF A MISUNDERSTANDING AS TO THE AMOUNT OF WORK INVOLVED OR LACK OF KNOWLEDGE OF EXISTING CONDITIONS.

B. UNDER THIS DIVISION OF THE SPECIFICATIONS, THE CONTRACTOR SHALL FURNISH AND INSTALL THE ELECTRICAL SYSTEM FOR THIS PROJECT, ALL IN ACCORDANCE WITH THESE SPECIFICATIONS AND THE CORRESPONDING DRAWINGS. THE OMISSION OF EXPRESS REFERENCE TO ANY PARTS NECESSARY FOR, OR REASONABLY INCIDENTAL TO, THE COMPLETE INSTALLATION SHALL NOT BE CONSTRUED AS RELEASING THE CONTRACTOR FROM RESPONSIBILITY FOR FURNISHING SUCH PARTS.

2. DRAWINGS AND SPECIFICATIONS:

A. THESE SPECIFICATIONS AND THE CORRESPONDING DRAWINGS FORM A SET OF PLANS FOR THE ELECTRICAL WORK OF THIS PROJECT AND NEITHER SHALL BE COMPLETE WITHOUT THE OTHER. WHERE AN ITEM IS MENTIONED IN ONE AND NOT THE OTHER, IT SHALL BE CONSIDERED AS BINDING IN THE CONTRACT AS THOUGH MENTIONED IN BOTH.

B. THE DRAWINGS ACCOMPANYING THE SPECIFICATIONS ARE DIAGRAMMATIC AND ARE INTENDED TO INDICATE THE APPROXIMATE AND RELATIVE LOCATIONS OF SERVICES AND EQUIPMENT. THE DRAWINGS SHALL NOT BE SCALED. VERIFY BUILDING DIMENSIONS WITH DIMENSIONS ON THE ARCHITECTURAL DRAWINGS. INSTALL ALL SYSTEMS AND INDIVIDUAL EQUIPMENT ACCORDING TO THE MANUFACTURER'S INSTALLATION RECOMMENDATIONS.

C. IN SPECIFYING MATERIALS AND/OR METHODS, THE INTENT IS TO INDICATE THE MINIMUM STANDARD OF QUALITY ACCEPTABLE TO THE OWNER. IN ALL CASES THE MINIMUM STANDARDS OF THE EXISTING FEDERAL, STATE AND LOCAL CODES AND LOCAL REGULATION SHALL PREVAIL.

D. THE TERM "CIRCUIT" AS USED IN THESE SPECIFICATIONS SHALL BE UNDERSTOOD TO INCLUDE ALL DEVICES AS WELL AS THE INTERCONNECTING CONDUCTORS NECESSARY TO PROVIDE A COMPLETE ELECTRICAL CIRCUIT FROM SOURCE TO LOAD HAVING THE REQUIRED CONTROL FUNCTION.

3. APPROVAL OF MATERIAL:

A. WHERE ONE MANUFACTURER, MODEL OR BRAND NAME IS SPECIFIED ALONE, NO SUBSTITUTION WILL BE ALLOWED, UNLESS SPECIFICALLY STATED. WHERE MORE THAN ONE MANUFACTURER, MODEL OR BRAND NAME IS SPECIFIED FOR THE SAME ITEM, THE CONTRACTOR MAY CHOOSE BETWEEN THEM. WHEN ONE OR MORE MANUFACTURERS, MODELS OR BRAND NAMES ARE MENTIONED AND FOLLOWED BY THE PHRASE (OR APPROVED EQUAL), IT SHALL BE UNDERSTOOD THAT THE NAMES MENTIONED ARE TO SET A STANDARD, AND ANOTHER MANUFACTURER, MODEL OR BRAND NAME MAY BE USED IF FULLY EQUAL OR SUPERIOR.

B. SHOULD EQUIPMENT FURNISHED BE DIFFERENT FROM THE MODEL NUMBERS IN THE SPECIFICATIONS, SCHEDULES OR DRAWINGS, THE CONTRACTOR INITIATING SUCH CHANGE SHALL BE RESPONSIBLE FOR ALL EXTRA COSTS.

C. ACCEPTANCE OF SUBSTITUTIONS SHALL IN NO WAY RELIEVE THE SUBCONTRACTOR FROM THE RESPONSIBILITY FOR ANY DEFICIENCY WHICH MAY EXIST IN THE SUBSTITUTE PRODUCT OR FROM PERFORMING THE WORK IN ACCORDANCE WITH REQUIREMENTS OF THE CONTRACT DOCUMENTS. IF THE ACCEPTED SUBSTITUTION REQUIRES CHANGES OR MODIFICATIONS TO THE WORK OF ANY OTHER TRADES, SUCH CHANGES SHALL BE CONSIDERED PART OF THE SUBSTITUTION AND SHALL BE COORDINATED AND PERFORMED BY THE CONTRACTOR AT NO ADDITIONAL COST TO THE OWNER.

4. PERMITS, FEES, LICENSES AND SERVICES:

A. ALL PERMITS, LICENSES, FEES AND SERVICE CHARGES REQUIRED IN CONNECTION WITH THE WORK OF THIS DIVISION SHALL BE SECURED AND PAID FOR BY THIS CONTRACTOR.

B. UTILITY COMPANY CHARGES ASSOCIATED WITH PROVIDING PERMANENT SERVICE TO BE PAID BY THIS CONTRACTOR. PROVIDE SEPARATE LINE ITEM PRICING FOR UTILITY CHARGES/FEES. THE ELECTRICAL CONTRACTOR SHALL INCLUDE PRICING AS PART OF THE ELECTRICAL SCOPE/BID. IF NO CHARGES, INDICATE AS SUCH. IF UTILITY CHARGES ARE NOT AVAILABLE AT TIME OF BID INDICATE AS SUCH.

C. SCHEDULE AND COORDINATE ALL WORK WITH GOVERNMENT AGENCIES AND UTILITY COMPANIES. ARRANGE FOR ALL INSPECTIONS AND FURNISH CERTIFICATION OF FINAL INSPECTION AND ANY OTHER APPROVALS AS REQUIRED BY ENFORCEMENT AUTHORITIES.

D. INSTALL EQUIPMENT ACCORDING TO UTILITY COMPANY'S WRITTEN REQUIREMENTS. PROVIDE GROUNDING AND EMPTY CONDUITS AS REQUIRED BY THE UTILITY COMPANY.

5. MAINTENANCE AND OPERATING INSTRUCTIONS:

A. THE CONTRACTOR SHALL BE RESPONSIBLE FOR INSTRUCTING THE OWNER'S DESIGNATED PERSONNEL IN THE MAINTENANCE OF ALL EQUIPMENT AND SPECIAL SYSTEMS INSTALLED AS A PART OF THIS PROJECT. AT THE TIME THAT INSTRUCTIONS ARE BEING GIVEN, THE CONTRACTOR SHALL PRESENT THE OWNERS DESIGNATED PERSONNEL WITH (2) TWO COMPLETE MANUFACTURER'S OPERATING AND MAINTENANCE MANUALS.

6. COORDINATION:

A. CORRELATE WORK WITH THAT OF OTHER CONTRACTORS. ORGANIZE WORK SO THAT IT WILL NOT INTERFERE WITH OR DELAY THE WORK OF OTHER CONTRACTORS.

B. FIELD VERIFY SCALED DIMENSIONS OF PLANS SINCE ACTUAL LOCATIONS, DISTANCES AND LEVELS WILL BE GOVERNED BY ACTUAL FIELD CONDITIONS.

C. THE CONTRACTOR SHALL VERIFY EXACT LOCATION, SIZE AND EXTENT OF ALL EXISTING UTILITIES, OBSTRUCTIONS AND/OR OTHER CONDITIONS WHICH MAY AFFECT THE PROPOSED WORK UNDER THE PROJECT. THE CONTRACTOR SHALL TAKE EVERY PRECAUTION TO PREVENT DAMAGE TO EXISTING WORK AND SHALL REPAIR ANY DAMAGE AS A RESULT OF THIS WORK.

D. COORDINATE ELECTRICAL SERVICE CONNECTIONS TO COMPONENTS FURNISHED BY UTILITY COMPANIES. COORDINATE INSTALLATION AND CONNECTION OF EXTERIOR UNDERGROUND AND OVERHEAD UTILITIES AND SERVICES, INCLUDING PROVISION FOR ELECTRICITY-METERING COMPONENTS. COMPLY WITH REQUIREMENTS OF AUTHORITIES HAVING JURISDICTION AND OF UTILITY COMPANY PROVIDING ELECTRICAL POWER AND OTHER SERVICES.

E. THE CONTRACTOR SHALL VERIFY EXACT LOCATION, SIZE AND EXTENT OF ALL EXISTING UTILITIES, OBSTRUCTIONS AND/OR OTHER CONDITIONS WHICH MAY AFFECT THE PROPOSED WORK UNDER THE PROJECT. THE CONTRACTOR SHALL TAKE EVERY PRECAUTION TO PREVENT DAMAGE TO EXISTING WORK AND SHALL REPAIR ANY DAMAGE AS A RESULT OF THIS WORK.

F. THE CONTRACTOR SHALL VERIFY ALL DOOR SWINGS IN THE FIELD AND MOUNT SWITCHES ON LATCH SIDE OF DOORS OR AS APPROVED BY THE ENGINEER.

7. FIRESTOPPING:

A. APPLY FIRESTOPPING TO CABLE AND RACEWAY PENETRATIONS OF FIRE-RATED FLOOR AND WALL ASSEMBLIES TO ACHIEVE FIRE-RESISTANCE RATING OF THE ASSEMBLY.

8. ELECTRICAL REQUIREMENTS:

A. ELECTRICAL CHARACTERISTICS, SUCH AS VOLTAGE AND PHASE, SHALL BE AS GIVEN IN THE CONTRACT DOCUMENTS. WHERE THIS INFORMATION IS NOT GIVEN, THE CONTRACTOR SHALL CONTACT THE ENGINEER PRIOR TO BIDDING. NO EXTRA COMPENSATION WILL BE ALLOWED BECAUSE OF FAILURE TO CONTACT THE ENGINEER TO OBTAIN ELECTRICAL CHARACTERISTICS NOT GIVEN.

B. IF A CONFLICT OF VOLTAGE/PHASE BETWEEN DISTRIBUTION EQUIPMENT/PANELS IS GIVEN IN THE CONTRACT DOCUMENTS, THE CONTRACTORS AND OR SUPPLIER SHALL CONTRACT THE ENGINEER PRIOR TO BIDDING (EXAMPLE: A SINGLE PHASE BREAKER FEEDING A THREE PHASE PANEL). NO EXTRA COMPENSATION WILL BE ALLOWED BECAUSE OF FAILURE TO CONTACT THE ENGINEER TO OBTAIN ELECTRICAL CHARACTERISTICS IN CONFLICT.

C. DISCONNECTS, MAGNETIC MOTOR STARTER AND/OR OVERLOAD PROTECTION AND CONTROLS SHALL BE FURNISHED, INSTALLED AND WIRED BY THIS CONTRACTOR UNLESS OTHERWISE NOTED. ALL MOTOR STARTERS SHALL BE EQUIPPED WITH OVERLOAD PROTECTION. MECHANICAL CONTRACTOR SHALL FURNISH ALL SINGLE-PHASE MOTORS WITH BUILT-IN OVERLOAD PROTECTION. THIS CONTRACTOR SHALL WIRE ALL MECHANICAL EQUIPMENT WHICH IS NOT FACTORY WIRED (POWER AND CONTROL WIRING), UNLESS OTHERWISE NOTED.

9. EQUIPMENT CONNECTIONS:

A. VERIFY CONNECTION REQUIREMENTS BEFORE INSTALLATION FOR ALL EQUIPMENT FURNISHED AND INSTALLED BY OTHERS. ACTUAL EQUIPMENT FURNISHED MAY DIFFER AND SHALL BE VERIFIED FROM EQUIPMENT SHOP DRAWINGS OR OTHER PROPER INFORMATION TO ASSURE CORRECT ELECTRICAL PROVISIONS.

B. NO ADDITIONAL COSTS TO THE OWNER SHALL BE INCURRED FOR MODIFICATIONS TO ADJUST EQUIPMENT PROVISIONS INSTALLED INCORRECTLY DUE TO INATTENTION TO READILY AVAILABLE SHOP DRAWINGS OR OTHER EQUIPMENT INFORMATION.

10. CUTTING AND PATCHING:

A. CUT, CHANNEL, CHASE, AND DRILL FLOORS, WALLS, PARTITIONS, CEILINGS, AND OTHER SURFACES REQUIRED TO PERMIT ELECTRICAL INSTALLATIONS. PERFORM CUTTING BY SKILLED MECHANICS OF TRADES INVOLVED.

B. REPAIR AND REFINISH DISTURBED FINISH MATERIALS AND OTHER SURFACES TO MATCH ADJACENT UNDISTURBED SURFACES. INSTALL NEW FIREPROOFING WHERE EXISTING FIRESTOPPING HAS BEEN DISTURBED. REPAIR AND REFINISH MATERIALS AND OTHER SURFACES BY SKILLED MECHANICS OF TRADES INVOLVED.

11. CLEANING AND PROTECTION:

A. ON COMPLETION OF INSTALLATION, INCLUDING OUTLETS, FITTINGS, AND DEVICES, INSPECT EXPOSED FINISH. REMOVE BURRS, DIRT, PAINT SPOTS, AND CONSTRUCTION DEBRIS.

B. PROTECT EQUIPMENT AND INSTALLATIONS AND MAINTAIN CONDITIONS TO ENSURE THAT COATINGS, FINISHES, AND CABINETS ARE WITHOUT DAMAGE OR DETERIORATION AT TIME OF SUBSTANTIAL COMPLETION.

12. RELATED WORK:

A. CONCRETE FOUNDATION AND PITS: THE ELECTRICAL CONTRACTOR SHALL PROVIDE SUITABLE CONCRETE FOUNDATIONS, PADS, PITS, AND NECESSARY ANCHOR BOLTS, TIE PLATES, ETC. FOR HIS SYSTEMS UNLESS OTHERWISE NOTED OR SPECIFIED.

13. GUARANTEE:

A. THE ELECTRICAL CONTRACTOR SHALL GUARANTEE ALL MATERIALS, WORKMANSHIP AND THE SUCCESSFUL OPERATION OF ALL APPARATUS FURNISHED AND INSTALLED FOR A PERIOD OF ONE (1) YEAR FROM THE DATE OF THE FINAL ACCEPTANCE.

14. EXISTING SYSTEMS

A. THIS CONTRACTOR SHALL MAKE ALL CHANGES TO THE EXISTING SYSTEMS AS REQUIRED TO COMPLETE THE INSTALLATION. THIS CONTRACTOR SHALL RELOCATE, REPLACE OR REMOVE EXISTING ELECTRICAL SYSTEM COMPONENTS AS REQUIRED.

B. WHERE CLOSE OBSERVATION OF THE SITE INDICATES THE NECESSITY OF MODIFYING THE EXISTING ELECTRICAL INSTALLATIONS TO FACILITATE THE WORK OF OTHER CONTRACTORS, THE ELECTRICAL CONTRACTOR SHALL BE RESPONSIBLE FOR MAKING THESE MODIFICATIONS.

C. WHERE EXISTING COMPONENTS ARE TO BE REMOVED, THEY SHALL REMAIN THE PROPERTY OF THE OWNER, AND SHALL BE STORED AT THE JOB SITE AS DIRECTED BY THE OWNERS REPRESENTATIVE. ALL EXISTING CONDUCTORS WHICH ARE ABANDONED SHALL BE REMOVED TO THE NEAREST ACCESSIBLE BOX. WHERE REMOVAL IS NOT PRACTICAL, ABANDONED CONDUCTORS SHALL BE DISCONNECTED AT BOTH ENDS, WITHIN JUNCTION BOXES, AND TAPED AND IDENTIFIED WITH SUITABLE NAME TAGS.

D. THIS CONTRACTOR SHALL PERFORM ALL CUTTING, PATCHING AND REFINISHING REQUIRED AS A RESULT OF ELECTRICAL WORK DONE IN AREAS NOT OTHERWISE REMODELED.

E. IT MAY BE FOUND NECESSARY TO INTERRUPT SERVICES TO EXISTING BUILDING OR PORTIONS THEREOF DURING THE PROGRESS OF THIS WORK. WHEN SUCH INTERRUPTIONS ARE LIKELY TO OCCUR, MAKE PREVIOUS ARRANGEMENTS WITH THE OWNER AS TO THE MOST CONVENIENT TIME FOR SUCH INTERRUPTIONS. TEMPORARY SERVICE CONNECTIONS SHALL BE PROVIDED WHERE THE OWNER CANNOT PERMIT SERVICE INTERRUPTIONS. THE EXISTING OR TEMPORARY SERVICES SHALL BE MAINTAINED IN OPERATION UNTIL SUCH TIME THAT THE NEW SERVICES HAVE BEEN INSTALLED AND ARE READY FOR PERMANENT OPERATION.

15. DEMOLITION WORK IN EXISTING BUILDING

A. THIS CONTRACTOR SHALL BE RESPONSIBLE FOR DEMOLITION AS REQUIRED. NO ADDITIONAL COMPENSATION SHALL BE GRANTED FOR MISINTERPRETATION OR OVERSIGHT ON BEHALF OF THE CONTRACTOR.

B. ALL FIXTURES AND ELECTRICAL DEVICES REMOVED DURING THE COURSE OF CONSTRUCTION SHALL REMAIN THE PROPERTY OF THE OWNER AND THE RESPONSIBILITY OF THE ELECTRICAL CONTRACTOR.

C. DUST, NOISE, VIBRATION AND TRAFFIC SHALL BE CONTROLLED TO A PRE-AGREED MINIMUM.

D. DEVICES, BOXES, CONDUIT AND EQUIPMENT WHICH HAVE SUFFERED PARTIAL REMOVAL OR ABANDONMENT SHALL BE COVERED, CAPPED OR MODIFIED SO AS TO CONFORM WITH ALL CODES AND SHALL PRESENT NO HAZARD FOR THE PRESENT OR THE FUTURE.

E. WHERE THIS PROJECT WILL CONSIST OF ALTERATION WORK WITHIN, AND CONSTRUCTION OF BUILDING ADDITIONS TO AN OPERATING FACILITY. DEMOLITION WORK SHALL BE COORDINATED AND CONDUCTED IN A MANNER THAT WILL NOT INTERFERE WITH NORMAL OPERATION OF THE BUILDING. ALL WORK SHALL BE PLANNED IN ADVANCE WITH THE OWNER AND ARCHITECT.

F. MATERIALS AND EQUIPMENT NOTED TO BE REUSED SHALL BE EXAMINED AND REPAIRED AS REQUIRED SO THAT MATERIALS AND EQUIPMENT WILL BE PRESENTABLE AND IN GOOD WORKING CONDITION.

G. IT MAY BE FOUND NECESSARY TO INTERRUPT SERVICE TO EXISTING BUILDING OR PORTIONS THEREOF DURING THE PROGRESS OF THIS WORK. WHEN SUCH INTERRUPTIONS ARE LIKELY TO OCCUR, MAKE PREVIOUS ARRANGEMENTS WITH THE OWNER AS TO THE MOST CONVENIENT TIMES FOR SUCH INTERRUPTIONS. TEMPORARY SERVICE CONNECTIONS SHALL BE PROVIDED WHERE THE OWNER CANNOT PERMIT SERVICE INTERRUPTIONS. THE EXISTING OR TEMPORARY SERVICES SHALL BE MAINTAINED IN OPERATION UNTIL SUCH TIME THAT THE NEW SERVICES HAVE BEEN INSTALLED AND ARE READY FOR PERMANENT OPERATION.

BASIC MATERIALS AND METHODS

1. CONDUCTORS AND CABLES:

A. PROVIDE COPPER CONDUCTORS EXCEPT WHERE ALUMINUM CONDUCTORS ARE SPECIFICALLY INDICATED OR PERMITTED FOR SUBSTITUTION. ALUMINUM CONDUCTORS MAY BE SUBSTITUTED FOR CONDUCTORS #6 AND LARGER. CONDUCTOR SIZES INDICATED ARE BASED ON COPPER UNLESS SPECIFICALLY INDICATED AS ALUMINUM. WHERE ALUMINUM CONDUCTORS ARE SUBSTITUTED FOR COPPER, COMPLY WITH THE FOLLOWING:

1) SIZE ALUMINUM CONDUCTORS TO PROVIDE, COMPARABLE TO COPPER SIZES INDICATED, EQUIVALENT OR GREATER AMPACITY AND EQUIVALENT OR LESS VOLTAGE DROP.

2) INCREASE SIZE OF RACEWAYS, BOXES, WIRING GUTTERS, ENCLOSURES, ETC. AS REQUIRED TO ACCOMMODATE ALUMINUM CONDUCTORS.

3) PROVIDE ALUMINUM EQUIPMENT GROUND CONDUCTOR SIZED ACCORDING TO NFPA 70. ALUMINUM CONDUCTORS.

B. CONDUCTORS AND CABLES INSTALLED EXPOSED IN SPACES USED FOR ENVIRONMENTAL AIR SHALL BE PLENUM RATED, LISTED AND LABELED AS SUITABLE FOR USE IN RETURN AIR PLENUMS.

C. UNLESS SPECIFICALLY INDICATED TO BE EXCLUDED, PROVIDE ALL REQUIRED CONDUIT, BOXES, WIRING, CONNECTORS, ETC. AS REQUIRED FOR A COMPLETE OPERATING SYSTEM.

D. UNLESS DIMENSIONED, CIRCUIT ROUTING INDICATED IS DIAGRAMMATIC. WHEN CIRCUIT DESTINATION IS INDICATED WITHOUT SPECIFIC ROUTING, DETERMINE EXACT ROUTING REQUIRED.

E. NONMETALLIC-SHEATHED CABLE MAY BE SUBSTITUTED FOR WIRE IN CONDUIT IF ALLOWED BY CODE. INSTALL NONMETALLIC-SHEATHED CABLE (TYPE NM-B) IN ACCORDANCE WITH NECA 121.

F. MC CABLE MAY BE SUBSTITUTED FOR WIRE IN CONDUIT IF ALLOWED BY CODE. INSTALL METAL-CLAD CABLE (TYPE MC) IN ACCORDANCE WITH NECA 120.

G. UNLESS SPECIFICALLY INDICATED TO BE EXCLUDED, PROVIDE FINAL CONNECTIONS TO ALL EQUIPMENT AND DEVICES, INCLUDING THOSE FURNISHED BY OTHERS, AS REQUIRED FOR A COMPLETE OPERATING SYSTEM.

2. GROUNDING AND BONDING:

A. PROVIDE ALL REQUIRED COMPONENTS, CONDUCTORS, CONNECTORS, CONDUIT, BOXES, FITTINGS, SUPPORTS, ACCESSORIES, ETC. AS NECESSARY FOR A COMPLETE GROUNDING AND BONDING SYSTEM. WHERE CONDUCTOR SIZE IS NOT INDICATED, SIZE TO COMPLY WITH NFPA 70.

B. PROVIDE CONNECTION TO GROUNDING ELECTRODES FROM THE FOLLOWING METHODS BELOW TO FORM A GROUNDING ELECTRODE SYSTEM.

1) METAL UNDERGROUND WATER PIPES: PROVIDE CONNECTION TO UNDERGROUND METAL DOMESTIC WATER SERVICE PIPE(S) THAT ARE IN DIRECT CONTACT WITH EARTH FOR A LEAST 10 FEET AT AN ACCESSIBLE LOCATION NOT MORE THAN 5 FEET FROM THE POINT OF ENTRANCE TO THE BUILDING.

2) CONCRETE-ENCASED ELECTRODE: PROVIDE CONNECTION TO CONCRETE-ENCASED ELECTRODE CONSISTING OF NOT LESS THAN 20 FEET OF EITHER STEEL REINFORCING BARS OR BARE COPPER CONDUCTOR NOT SMALLER THAN 4 AWG EMBEDDED WITHIN CONCRETE FOUNDATION OR FOOTING THAT IS IN DIRECT CONTACT WITH EARTH IN ACCORDANCE WITH NFPA 70.

3) GROUND ROD ELECTRODE(S): PROVIDE THREE ELECTRODES IN AN EQUILATERAL TRIANGLE CONFIGURATION NOT LESS THAN 10 FEET FROM EACH OTHER.

C. PROVIDE 1/4"x4"x12" GROUND BAR, SEPARATE FROM SERVICE EQUIPMENT ENCLOSURE, FOR COMMON CONNECTION POINT OF GROUND ELECTRODE SYSTEM BONDING JUMPERS AS PERMITTED IN NFPA 70.

D. FOR EACH SERVICE DISCONNECT, PROVIDE GROUNDING ELECTRODE CONDUCTOR TO CONNECT NEUTRAL (GROUNDED) SERVICE CONDUCTOR TO THE GROUNDING ELECTRODE SYSTEM. PROVIDE A MAIN BONDING JUMPER TO CONNECT THE NEUTRAL (GROUNDED) BUS TO THE EQUIPMENT GROUND BUS WHERE NOT FACTORY-INSTALLED.

E. PROVIDE BONDING FOR EQUIPMENT GROUNDING CONDUCTORS, EQUIPMENT GROUND BUSSES, METALLIC EQUIPMENT ENCLOSURES, METALLIC RACEWAYS AND BOXES, AND OTHER NORMALLY NON-CURRENT CONDUCTIVE MATERIALS LIKELY TO BECOME ENERGIZED.

F. PROVIDE INSULATED GREEN GROUNDING CONDUCTOR IN EACH FEEDER AND BRANCH CIRCUIT RACEWAY. DO NOT USE RACEWAYS AS SOLE EQUIPMENT GROUNDING CONDUCTOR. WHERE CIRCUIT SIZE ARE INCREASED FOR VOLTAGE DROP, INCREASE SIZE OF EQUIPMENT GROUNDING CONDUCTOR PROPORTIONALLY IN ACCORDANCE WITH NFPA 70.

G. COMMUNICATIONS SYSTEMS GROUNDING AND BONDING: PROVIDE SIZE 6 AWG BONDING JUMPER IN RACEWAY FROM INTERSYSTEM BONDING TERMINATION TO EACH COMMUNICATIONS ROOM OR BACKBOARD AND PROVIDE GROUND BAR FOR TERMINATION.

H. MAKE GROUNDING AND BONDING CONNECTIONS USING THE FOLLOWING METHODS BELOW:

1) EXOTHERMIC WELDS; MAKE CONNECTIONS USING MOLDS AND WELD MATERIALS SUITABLE FOR THE INSTALLATION.
2) MECHANICAL CONNECTORS: SECURE CONNECTIONS ACCORDING TO MANUFACTURER'S TORQUE SETTINGS.
3) COMPRESSION CONNECTORS: SECURE CONNECTIONS USING MANUFACTURER'S TOOLS AND DIES.

3. LIGHTING AND POWER PANELBOARDS:

A. NEMA PB1 AS SCHEDULED, 20" WIDE SECTION, 225 AMP BUS (100A BUS PERMITTED IF LESS THAN 30 BRANCH POLES). PROVIDE A GROUND BUS FOR ISOLATED GROUND CIRCUITS. BUS MATERIAL ALUMINUM OR COPPER INSTALL PER NEMA PB1.1 BALANCE PHASE CURRENTS TO 10% MAXIMUM VARIATION. PROVIDE TYPEWRITTEN BRANCH CIRCUIT DIRECTORY. LOCKABLE DOORS, KEYED ALIKE UNLESS NOTED OTHERWISE. SURFACE MOUNTED OR FLUSH MOUNTED ENCLOSURES AS INDICATED.

B. CIRCUIT BREAKERS: NEMA AB1 AS SCHEDULED, PLUG-IN OR BOLT-ON. MULTIPLE POLE BREAKERS SHALL HAVE A COMMON TRIP HANDLE. PROVIDE CIRCUIT BREAKERS WITH INTERRUPTING CAPACITY NOT LESS THAN THE AVAILABLE FAULT CURRENT AT THE INSTALLED LOCATION AS INDICATED ON THE DRAWINGS.

C. LOAD CENTERS: CIRCUIT BREAKER TYPE, THERMAL MAGNETIC PLUG-IN, FLUSH MOUNTED ENCLOSURE UNLESS OTHERWISE INDICATED.

4. WIRING DEVICES:

A. ALL WIRING DEVICES INSTALLED SHALL BE "SPECIFICATION GRADE" AND MANUFACTURED BY ARROW HART, LEVITON, HUBBEL OR EQUAL.

B. LOCAL SWITCHES SHALL BE TOGGLE TYPE, AC, RATED 20A, 125V, QUIET TYPE WITH SILENT OPERATING MECHANISM, TOTALLY ENCLOSED IN A MOLDED COMPOSITION BASE. ALL RECEPTACLES SHALL BE GROUNDING TYPE. UNLESS OTHERWISE INDICATED, LOCAL SWITCHES AND DIMMERS SHALL BE INSTALLED 48 INCHES ABOVE FINISHED FLOOR, RECEPTACLES SHALL BE INSTALLED 18 INCHES ABOVE FINISHED FLOOR OR 6 INCHES ABOVE COUNTER.

C. NEUTRAL CONDUCTORS SHALL NOT BE SHARED ON BRANCH CIRCUITS UTILIZING WALL DIMMERS.

D. GFI DUPLEX RECEPTACLES: NEMA 5-20R CONFIGURATION AND RATING, SELF CONTAINED GROUND FAULT CURRENT INTERRUPTING DUPLEX RECEPTACLE, LISTED AND LABELED AS TAMPER RESISTANT TYPE AND AS WEATHER RESISTANT TYPE COMPLYING WITH UL 498 SUPPLEMENT SE SUITABLE FOR INSTALLATION IN DAMP OR WET LOCATIONS, GRAY COLOR. PROVIDE WITH WEATHERPROOF BOX AND COVER WHERE INDICATED.

E. TAMPER RESISTANT CONVENIENCE RECEPTACLES: COMMERCIAL SPECIFICATION GRADE, 20A, 125V, NEMA 5-20R, LISTED AND LABELED AS TAMPER RESISTANT TYPE.

F. WALL DEVICE AND PLATE COLOR BY ARCHITECT.

5. LIGHTING FIXTURES:

A. SEE LIGHTING FIXTURE SCHEDULE ON THE ELECTRICAL DRAWINGS FOR TYPE AND DESCRIPTION OF LUMINARIES.

B. THE ELECTRICAL CONTRACTOR SHALL BE RESPONSIBLE FOR THE PROCUREMENT, UNLOADING, STORAGE AND PROTECTION OF LIGHTING FIXTURES. PROVIDE ALL NECESSARY LABOR AND MATERIALS FOR A COMPLETE OPERATING SYSTEM.

C. UPON INTERRUPTION OF NORMAL POWER SOURCE, SOLID-STATE CONTROL WILL AUTOMATICALLY SWITCH TO BATTERY POWER WITH CONNECTED LED LAMPS FOR MINIMUM 90 MINUTES OF RATED EMERGENCY ILLUMINATION, AND AUTOMATICALLY RECHARGES BATTERY UPON RESTORATION OF NORMAL POWER SOURCE. UNLESS OTHERWISE INDICATED, CONNECT UNIT TO UN-SWITCHED POWER FROM SAME CIRCUIT FEEDING NORMAL LIGHTING IN SAME ROOM OR AREA. BYPASS LOCAL SWITCHES, CONTACTOR, OR OTHER LIGHTING CONTROLS.

D. EXIT SIGNS SHALL BE INTERNALLY ILLUMINATED WITH LED'S, SINGLE OR DOUBLE FACE AS INDICATED ON THE DRAWING, DIRECTIONAL ARROWS AS INDICATED OR REQUIRED FOR THE INSTALLED LOCATION. UNLESS OTHERWISE INDICATED, CONNECT UNIT TO UN-SWITCHED POWER FROM SAME CIRCUIT FEEDING NORMAL LIGHTING IN SAME ROOM OR AREA. BYPASS LOCAL SWITCHES, CONTACTOR, OR OTHER LIGHTING CONTROLS.

E. LEAVE PROTECTIVE FILM IN PLACE ON FIXTURES UNTIL FINAL CLEAN-UP.

6. LIGHTING CONTROL DEVICES:

A. PROVIDE FACTORY-ASSEMBLED COMMERCIAL SPECIFICATION GRADE OCCUPANCY SENSOR FOR INDOOR USE CAPABLE OF SENSING BOTH MAJOR AND MINOR MOTIONS, ACCORDING TO PUBLISHED COVERAGE AREAS, FOR AUTOMATIC LIGHTING CONTROL. PASSIVE INFRARED OR PASSIVE INFRARED/ULTRASONIC SENSOR TECHNOLOGY.

B. UNLESS OTHERWISE INDICATED, OCCUPANCY SENSORS SHALL BE MANUAL ON/AUTO OFF. WALL SWITCH OCCUPANCY SENSOR SHALL BE DESIGNED FOR INSTALLATION IN A STANDARD WALL BOX WITH A FIELD OF VIEW OF 180 DEGREES, INTEGRATED MANUAL CONTROL CAPABILITY.

C. WHERE INDICATED, INSTALL SEPARATE COMPATIBLE WALL SWITCHES FOR MANUAL CONTROL INTERFACE WITH DIRECTIONAL OR CEILING MOUNTED OCCUPANCY SENSORS.

7. STRUCTURED CABLING FOR VOICE AND DATA:

A. PROVIDE A COMPLETE PERMANENT SYSTEM OF PATHWAYS FOR VOICE/DATA AND COMMUNICATIONS, INCLUDING CONDUITS AND PULL WIRE, SUPPORT STRUCTURES, ENCLOSURES, CABINETS, AND BACK BOXES.

B. COORDINATE REQUIREMENTS FOR SERVICE ENTRANCE AND ENTRANCE FACILITIES WITH COMMUNICATIONS SERVICE PROVIDER.

8. FIRE DETECTION AND ALARM:

A. FIRE ALARM SYSTEM SHALL BE DESIGN BUILD BY THE ELECTRICAL CONTRACTOR. PRICING SHALL BE INCLUDED IN THE BID.

B. THE SYSTEM SHALL BE ADDRESSABLE BY APPROVED MANUFACTURERS AS FOLLOWS:

1) SIMPLEX
2) EDWARDS
3) NOTIFIER
4) PRYROTRONICS
5) FARADAY
6) FIKE
7) GAMEWELL FCI
8) SILENT KNIGHT

9. ENCLOSED SAFETY SWITCHES:

A. QUICK-MAKE, QUICK-BREAK, FUSIBLE OR NON-FUSIBLE, ENCLOSED SAFETY SWITCH LISTED AND LABELED AS COMPLYING WITH UL 98; GENERAL DUTY; RATINGS, AND CONFIGURATION AS INDICATED ON THE DRAWINGS. PROVIDE SAFETY INTERLOCK TO PREVENT OPENING THE COVER WITH THE SWITCH IN THE "ON" POSITION WITH CAPABILITY OF OVERRIDING INTERLOCK FOR TESTING PURPOSES. PROVIDE EXTERNALLY OPERABLE HANDLE WITH MEANS FOR LOCKING IN THE "OFF" POSITION, CAPABLE OF ACCEPTING TWO PADLOCKS.

B. PROVIDE FUSES FOR FUSIBLE SWITCHES AS INDICATED OR AS REQUIRED BY THE EQUIPMENT MANUFACTURER'S RECOMMENDATION.

10. FUSES:

A. UNLESS SPECIFICALLY INDICATED TO BE EXCLUDED, PROVIDE FUSES FOR ALL FUSIBLE EQUIPMENT AS REQUIRED FOR A COMPLETE OPERATING SYSTEM. PROVIDE FUSES OF THE SAME TYPE, RATING, AND MANUFACTURER WITH THE SAME SWITCH.

1) FUSIBLE SWITCHES LARGER THAN 600 AMPS: CLASS L, TIME-DELAY.
2) FUSIBLE SWITCHES UP TO 600 AMPS: CLASS RK1, TIME-DELAY.

11. IDENTIFICATION OF ELECTRICAL SYSTEMS:

A. PROVIDE IDENTIFICATION NAMEPLATE TO IDENTIFY EACH PIECE OF ELECTRICAL DISTRIBUTION AND CONTROL EQUIPMENT. USE SELF-ADHESIVE LAMINATED PLASTIC LABELS; UV, CHEMICAL, WATER, HEAT, AND ABRASIVE RESISTANT. USE FACTORY PRE-PRINTED OR MACHINE-PRINTED TEXT. DON NOT USE HANDWRITTEN TEXT UNLESS OTHERWISE INDICATED.

B. ARC-FLASH HAZARD WARNING: ELECTRICAL EQUIPMENT THAT IS LIKELY TO REQUIRE SERVICING OR MAINTENANCE WHILE ENERGIZED SHALL BE PROVIDED WITH A WARNING SIGN LOCATED CLEARLY VISIBLE TO QUALIFIED PERSONS BEFORE SERVICING OR MAINTENANCE OF THE EQUIPMENT. USE FACTORY PRE-PRINTED OR MACHINE-PRINTED SELF-ADHESIVE POLYESTER OR SELF-ADHESIVE VINYL LABELS PRODUCED USING MATERIALS RECOGNIZED TO UL 96.

COLORADO LICENSED PROFESSIONAL ENGINEER
DAVID A. EXE
55707
JUNE 17, 2022

REVIEWED FOR CODE COMPLIANCE
11/08/2022

INDOOR ENVIRONMENTS USA

NOTICE: DUTY OF COOPERATION

Release of these plans contemplates further cooperation among the owner, his contractor and the architect. Design and construction are complex. Although the architect and his consultants have performed their services with due care and diligence, they cannot guarantee perfection. Communication is imperfect and every contingency cannot be anticipated. Any ambiguity or discrepancy discovered by the use of these plans shall be reported immediately to the architect. Failure to notify the architect compounds misunderstanding and increases construction costs. A failure to cooperate by a simple notice to the architect shall relieve the architect from responsibility for the consequences. Changes made from the plans without consent of the architect are unauthorized and shall relieve the architect of responsibility for all consequences arriving out of such changes.

All design, documents and data prepared by Eric Smith Associates, P.C. as instruments of service shall remain property of Eric Smith Associates, P.C. and shall not be copied, changed or disclosed in any form whatsoever without first obtaining the express written consent of Eric Smith Associates, P.C.

© Eric Smith Associates, P.C.

REVISIONS

No.	Description	Date

uchealth

YVMC MOUNTAIN CLINIC
2305 MOUNTER WERNER CIRCLE
SUITE P.0217
STEAMBOAT SPRINGS, CO

ERIC SMITH ASSOCIATES, P.C.
1919 SEVENTH STREET
BOULDER, COLORADO, 80302
(303) 442-5458, (303) 442-4745 FAX

Job Number:	60531
Date:	JUNE 17, 2022
Drawn By:	DAE
Checked By:	DAE

Project Phase
CONSTRUCTION DOCUMENTS

Sheet Title
ELECTRICAL SPECIFICATIONS

Sheet Number
E-5.01

6/21/2022 8:35:51 AM FILE: