GENERAL NOTES AND DESIGN SPECIFICATIONS

GENERAL NOTES:

1. EVERY EFFORT HAS BEEN MADE TO ELIMINATE ERRORS DURING THE PREPARATION OF THESE DRAWINGS, BUT BECAUSE TIMBERLYNE CANNOT GUARANTEE AGAINST THE POSSIBILITY OF HUMAN ERROR, IT BECOMES THE OBLIGATION OF THE USER TO VERIFY THE ACCURACY OF ALL DETAILS AND DIMENSIONS AND PERSONALLY BE RESPONSIBLE FOR THEM.

2. NOTED DIMENSIONS TAKE PRECEDENCE OVER SCALE. LARGER SCALE OVER SMALLER SCALE.

3. ALL MECHANICAL AND ELECTRICAL PLANS AND SPECIFICATIONS ARE DESIGN/BUILD FURNISHED BY THE MECHANICAL/ELECTRICAL CONTRACTOR FOR THEIR USE.

4. ALL TIMBERS ARE FULL DIMENSION ROUGH SAWN UNLESS NOTED. SILL PLATE IS 2X TREATED UNLESS NOTED OTHERWISE. WE RECOMMEND SILL SEALER BE INSTALLED BENEATH THE SILL PLATE

5. WHERE FEASIBLE INSTALL THE BOLTS IN THE PLATE JOINERY SO THAT THE NUTS CAN BE ACCESSED FROM THE INTERIOR OF THE BARN. THE SIDING OR FRAMING MAY NEED TO BE NOTCHED SLIGHTLY FOR PLATE AND BOLT CLEARANCE.

6. VERIFY WINDOW AND DOOR ROUGH OPENINGS BEFORE FRAMING.

7. WE RECOMMEND 1X4 BREAKER BOARD BE INSTALLED AT SIDING SPLICES. WE RECOMMEND THAT THE CONTRACTOR INSTALL Z FLASHING @ ALL BREAKER BOARD LOCATIONS.

8. EXTERIOR FLASHING TO BE INSTALLED AT ALL CONNECTIONS BETWEEN ROOFS, WALLS, AND PROJECTIONS OR PENETRATIONS AS REQUIRED BY GOOD CONSTRUCTION PRACTICES. FLASHING IS NOT SUPPLIED BY TIMBERLYNE

9. ANY MATERIALS SHOWN ON THESE DRAWINGS WHICH ARE NOT WRITTEN IN YOUR CONTRACT OR INCLUDED IN THE TIMBERLYNE MATERIALS LIST ARE TO BE PROVIDED BY THE BUYER.

10. WHERE TREATED WOOD IS CROSSCUT, NOTCHED, OR BORED ON SITE, THE EXSPOSED UNTREATED WOOD SHOULD BE GIVEN TWO LIBERAL COATS OF A WOOD PRESERVATIVE SEALANT.

FOUNDATION NOTES:

1. FOUNDATION DESIGN AND ALL STRUCTURAL DETAILS ARE NOT SUPPLIED BY SAND CREEK POST & BEAM. ALL INFORMATION FOR FOUNDATION IS DESIGNED BY OTHER.

CODE: 2021 INTERNATIONAL BUILDING CODE & LOCAL CODES

LOADS
GROUND SNOW LOAD: 130 PSF
ROOF LIVE/SNOW LOAD: 101 PSF
FLOOR LIVE LOAD: 40 PSF
DECK LIVE LOAD: 60 PSF
WIND LOAD : 115 MPH (ULT) "C" EXPOSURE
(3 SECOND GUST)
SEISMIC DESIGN CATEGORY: C
IMPORTANCE CATEGORY: II

BUILDING ERECTION SAFETY NOTES:
THE CONTRACTOR IS RESPONSIBLE FOR IMPLEMENTING JOB SITE SAFETY AND CONSTRUCTION PROCEDURES IN ACCORDANCE WITH NATIONAL, STATE, AND LOCAL SAFETY REQUIREMENTS. THE ADEQUACY AND SAFETY OF ERECTION BRACING, SHORING, AND TEMPORARY SUPPORTS IS THE SOLE RESPONSIBILITY OF THE GENERAL CONTRACTOR.

WOOD TYPE

STRUCTURAL FRAMING: DOUG FIR #1 U.N.O
PURLIN: DOUG FIR #1 U.N.O

REVISION HISTORY

REV.#	DATE:	DESCRIPTION:
0.0	06/06/2024	INITIAL DRAWING CREATED
0.1	06/20/2024	ADDED FLOOR PLAN, UPDATED ROOF LINES
0.2	07/01/2024	UPDATED FLOOR PLAN AND DOORS AND WINDOWS
1.0	07/24/2024	STRUCTURAL PLANS CREATED
1.1	08/16/2024	STEP DOWN FOUNDATION, GIRDER SYSTEM BY TIMBERLYNE
2.0	08/26/2024	ENGINEERING REDLINES
2.1	09/09/2024	EXTENDED BENT #13 POST
3.0	10/04/2024	PERMITTING REDLINES 4.0
3.1	10/16/2024	MOVED AND ROTATED BUILDINGS

SYMBOLS

- WOOD IN SECTION
- CONCRETE IN SECTION
- SAND OR GRAVEL IN SECTION
- STEEL IN SECTION
- BATT INSULATION IN SECTION
- INSULATION NAILBASE IN SECTION
- ARCH ROOF
- BOARD AND BATTEN SIDING

E1
- ELEVATION NUMBER
- VIEW DIRECTION OF BUILDING ELEVATION

A-S300
- DESCRIBES DETAIL LETTER
- DESCRIBES PAGE DETAIL IS ON

- VIEW DIRECTION OF SECTION DETAILS
- POST CONNECTION TYPE

STANDARD ABBREVIATIONS

CONC	CONCRETE	MAX	MAXIMUM	EXT	EXTERIOR
CONT	CONTINUOUS	MIN	MINIMUM	FF	FINISHED FLOOR
DBL	DOUBLE	NTS	NOT TO SCALE	FTG	FOOTING
DF	DOUGLAS FIR	T.O.F.	TOP OF FOUNDATION	INSUL	INSULATION
EA	EACH	T.O.S.	TOP OF SUBFLOOR	INT	INTERIOR
STD	STANDARD	T&G	TONGUE & GROOVE	TYP	TYPICAL

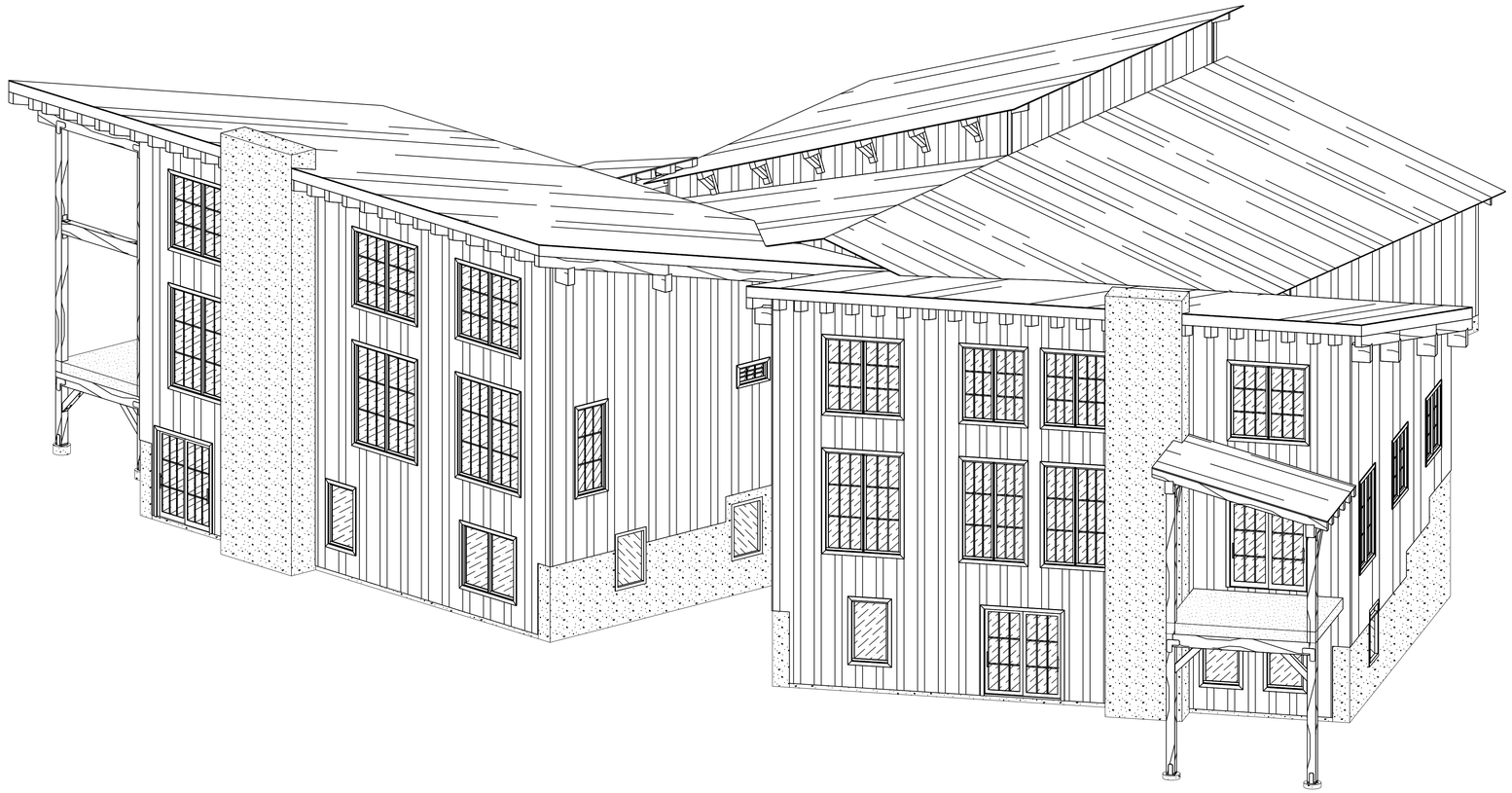

SHEET INDEX

G000 COVER SHEET
D200 MAIN FLOOR PLAN
D201 UPPER WINDOW PLAN
LOWER FLOOR PLAN
D300 EXTERIOR ELEVATIONS
D301 EXTERIOR ELEVATIONS
S200 FLOOR FRAMING PLAN RUSHMORE PAGES
S201 ROOF FRAMING PLAN
S202 RAFTER ATTACHMENT DETAILS
S300 BUILDING SECTIONS
S301 BUILDING SECTIONS
S400 BENT DETAILS
PLATE JOINERY DETAILS
S401 BENT DETAILS
S500 BENT LAYOUT
S501 FRAME 150
S600 SHEAR WALL SCHEDULE
S601 UPPER & LOWER SHEAR WALL SCHEDULE
S602 STAPPING LOCATION AND DETAIL
STEAMBOAT PAGES
S100 FLOOR FRAMING PLAN
S101 ROOF FRAMING PLAN
S102 RAFTER ATTACHMENT DETAILS
S800 BUILDING SECTIONS
S801 BUILDING SECTIONS
S802 BUILDING SECTIONS
S400 BENT DETAILS
PLATE JOINERY DETAILS
S401 BENT DETAILS
S1000 BENT LAYOUT
S1001 FRAME 150
S1100 SHEAR WALL SCHEDULE
S1101 UPPER & LOWER SHEAR WALL SCHEDULE
S1102 STRAPPING LOCATION AND DETAIL

S1200 BUILDING DETAILS
S1201 FLASHING DETAILS
S1300 GARAGE SECTION
S1301 GARAGE SHEAR WALL LAYOUT
A100 ARCHITECTURAL NOTES

LIST BELOW ARE ITEMS SHOWN IN DRAWINGS BUT ARE NOT PROVIDED BY TIMBERLYNE

- FINISHED ROOFING MATERIAL
- FLASHING MATERIAL
- INTERIOR FINISH
- WALL INSULATION
- FLOOR SYSTEM
- ROOF INSULATION, OSB, AND UNDERLAYMENT
- EXTERIOR DECK MATERIAL
- ALL MATERIAL AND TRUSS FOR GARAGE AREA (EXCEPT SIDING)

COLORADO LICENSED
KEVIN B. UZZANI
32718
PROFESSIONAL ENGINEER

SealPact 2024-10-18 09:57:52 EST
Click seal or scan QR Code for verification; otherwise not valid.

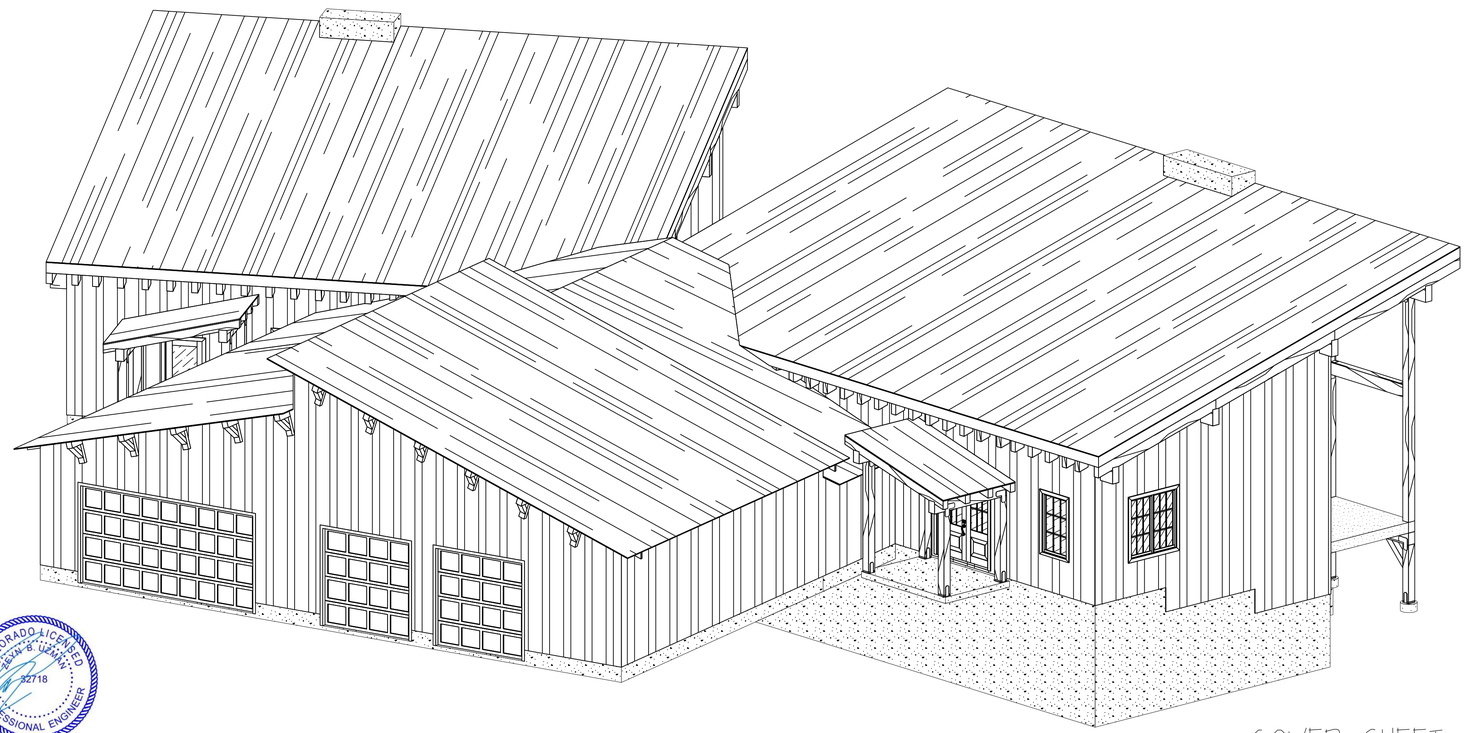

COVER SHEET

NOTE: LINE 3D DIAGRAMS ON COVER SHEET (SHEET #1) ARE REPRESENTATIONAL ONLY AND ARE NOT INTENDED FOR USE AS CONSTRUCTION DRAWINGS

TIMBERLYNE

www.timberlyne.com

Nebraska: 116 West 1st Street
Wayne, NE 68787
888-489-1680
Texas: 613 Hwy 46 E.
Boerne, TX 78006
877-680-1680

© 2021 Timberlyne, All Rights Reserved.
THIS PLAN AND DESIGNS CONTAINED HERIN ARE THE PROPERTY OF TIMBERLYNE GROUP™ AND MAY NOT BE REPRODUCED WITHOUT PRIOR WRITTEN CONSENT FROM TIMBERLYNE GROUP™.

CUSTOMER INFORMATION:

DAN MCENTEE

PROJECT INFORMATION:

MCENTEE GROUP HOME

200&202 SUNDANCE CT
STEAMBOAT SPRINGS,CO 80487

NUMBER: MGR0524-1
CATEGORY: Residential
STYLE: SINGLE SLOPE
OTHER: --
OTHER: --
PM: CM

DRAWING INFORMATION:

DRAWN BY: BL
DATE: 10/16/24
STATUS: STRUCTURAL
OTHER: --
OTHER: --

SHEET NOTES

SHEET

G000

RV502.1 One- and Two-family Dwellings and Townhouses. Each dwelling unit with a dedicated attached or detached garage or other onsite designated parking provided for the dwelling unit shall be provided with one EV ready space per dwelling unit. Re: General Notes on sheet A100 for further requirements.

RE302.2 Combustion Equipment. Combustion equipment shall be provided with all of the following:

1. A dedicated, appropriately phased branch circuit sized to accommodate future electric equipment or appliances to serve a comparable capacity to meet the heating load. Electrical Load Calculations must be done in order to ensure a future dedicated phased branch circuit hs been provided from the mechanical room to the panel for future use for Electrical Heating equipment.

2. An electric receptacle or junction box that meets the requirements of Section RE302.5, and is connected to the electrical panel through the branch circuit. Each electrical receptacle or junction box shall have reasonable access to the combustion equipment or dedicated physical space for future electric equipment with no obstructions other than the current combustion equipment.

See Section RE302.5 down below for distance requirements to outlet or junction box from equipment.

RE302.5 Adjacency. The electrical receptacle or junction box must be provided within 3 feet of the combustion equipment or appliances, or within 3 feet of the dedicated physical space for future electric equipment or appliances.

Exception: For combustion equipment dedicated to space or water heating, the electrical receptacle or junction box shall be located not more than 6 feet from the combustion equipment or the dedicated physical space for future electric equipment.

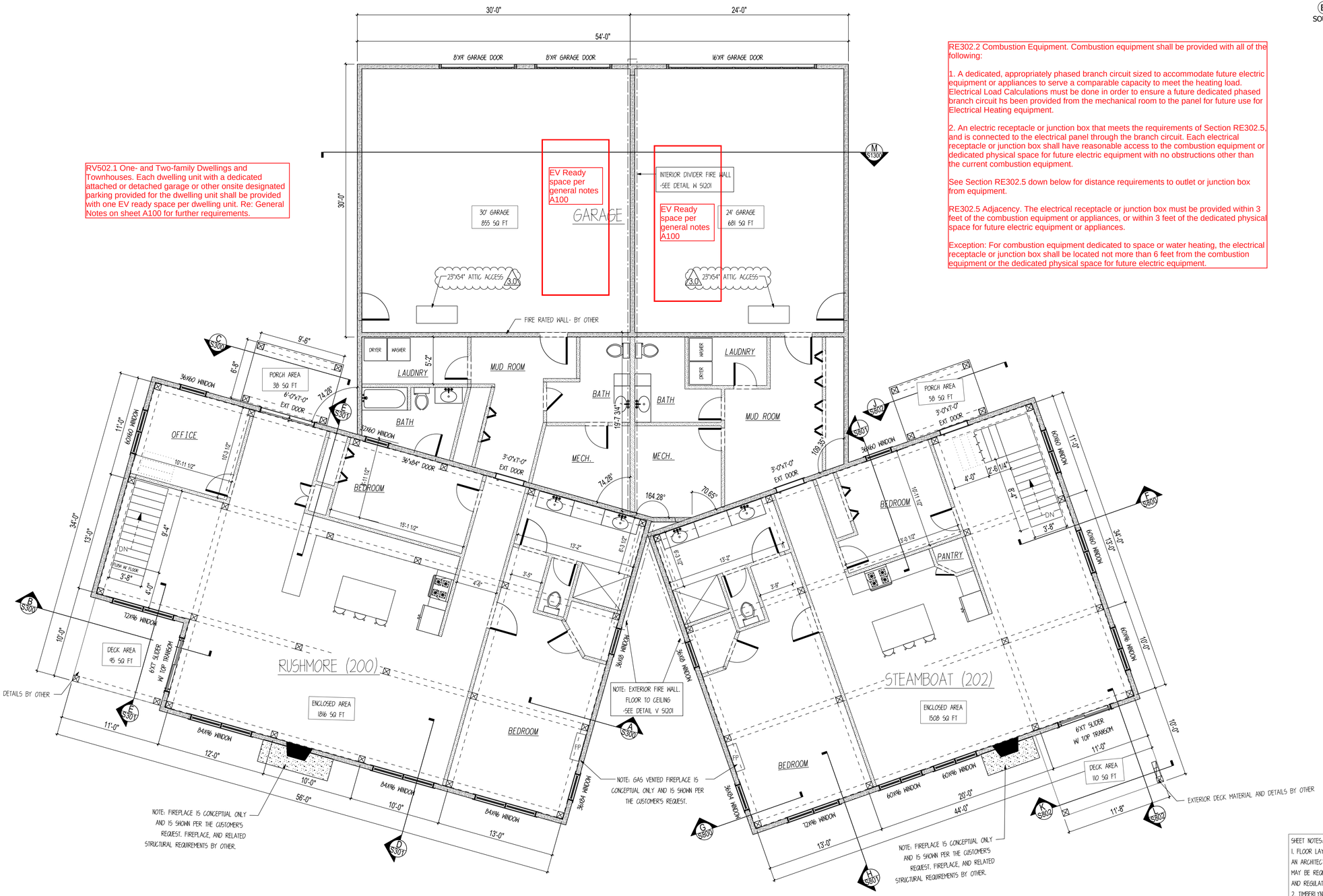

MAIN FLOOR LAYOUT

SCALE: 3/16"=1'

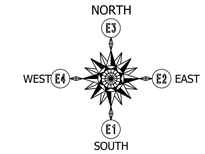

SHEET NOTES:
1. FLOOR LAYOUT DRAWINGS ARE NOT DESIGNED BY AN ARCHITECT. ADDITIONAL PROFESSIONAL SERVICES MAY BE REQUIRED TO COMPLY WITH LOCAL CODES AND REGULATIONS.
2. TIMBERLYNE IS NOT RESPONSIBLE FOR DESIGNING ELECTRICAL, PLUMBING, AND HVAC PLANS.
3. INTERIOR PARTITION WALLS, WINDOWS, DOORS, AND FIXTURES ARE PROVIDED BY CUSTOMER OR GENERAL CONTRACTOR.
4. DAYLIGHT OPENING, VENT OPENING, AND EGRESS REQUIREMENTS ARE THE RESPONSIBILITY OF THE CUSTOMER/GENERAL CONTRACTOR.
5. DOOR AND WINDOW LOCATIONS ARE APPROX. ONLY. EXACT LOCATION TO BE DETERMINED BY THE CUSTOMER AND GENERAL CONTRACTOR.

COLORADO LICENSED
ERIN B. LANAY
32718
PROFESSIONAL ENGINEER

SealPact 2024-10-18 09:57:52 EST
Click seal or scan QR Code for verification; otherwise not valid.

TIMBERLYNE

www.timberlyne.com

Nebraska: 116 West 1st Street
Wayne, NE 68787
888-489-1680
Texas: 613 Hwy 46 E.
Boerne, TX 78006
877-680-1680

© 2021 Timberlyne, All Rights Reserved.
THIS PLAN AND DESIGNS CONTAINED HERIN ARE THE PROPERTY OF TIMBERLYNE GROUP™ AND MAY NOT BE REPRODUCED WITHOUT PRIOR WRITTEN CONSENT FROM TIMBERLYNE GROUP™.

CUSTOMER INFORMATION:

DAN MCENTEE

PROJECT INFORMATION:

MCENTEE GROUP HOME

200&202 SUNDANCE CT
STEAMBOAT SPRINGS,CO 80487

NUMBER:	MGR0524-1
CATEGORY:	Residential
STYLE:	SINGLE SLOPE
OTHER:	--
OTHER:	--
PM:	CM

DRAWING INFORMATION:

DRAWN BY:	BL
DATE:	10/16/24
STATUS:	STRUCTURAL
OTHER:	--
OTHER:	--

SHEET NOTES

SHEET

D200

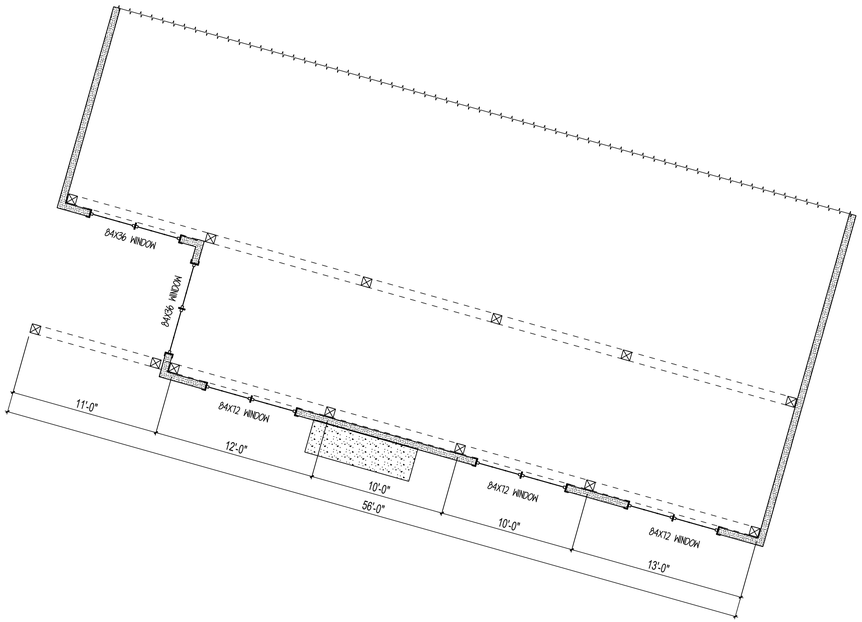

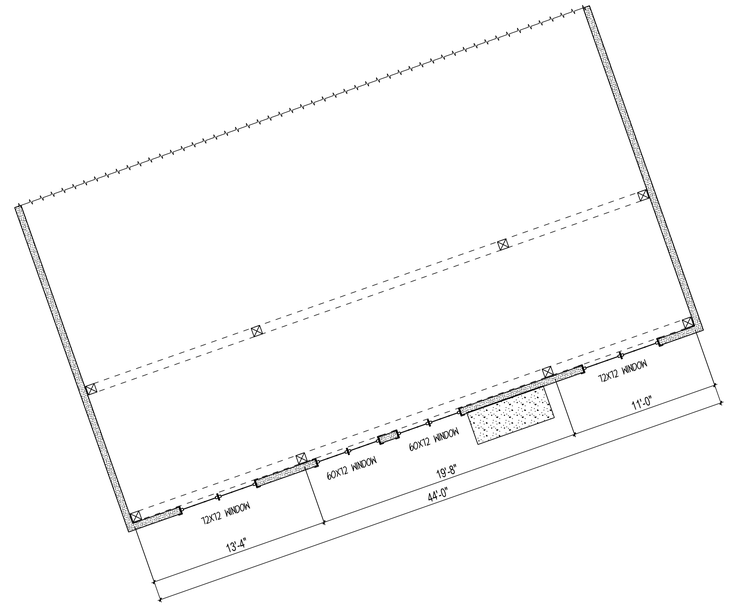

UPPER WINDOW LAYOUT

SCALE: 3/16"=1'

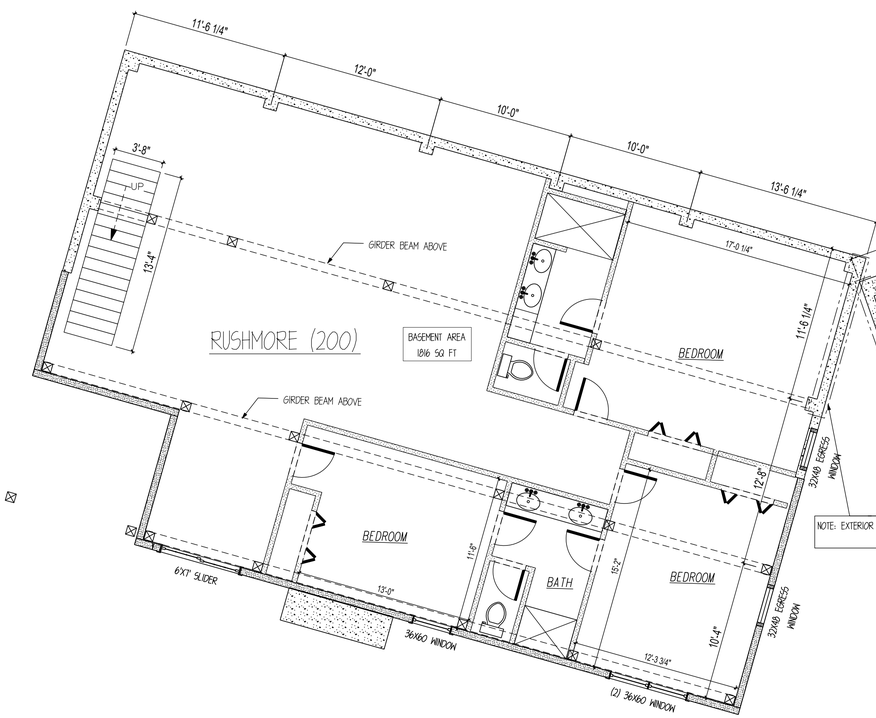

NOTE: EXTERIOR FIRE WALL.

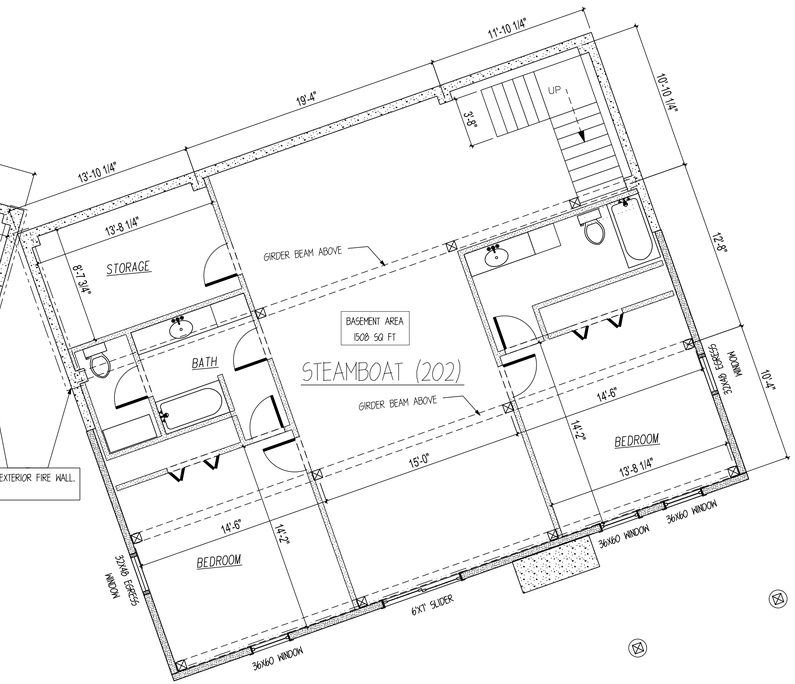

LOWER FLOOR LAYOUT

SCALE: 3/16"=1'

COLORADO LICENSED
BRIAN B. LEMAY
32718
PROFESSIONAL ENGINEER

SealPact 2024-10-18 09:57:52 EST
Click seal or scan QR Code for verification; otherwise not valid.

SHEET NOTES:

1. FLOOR LAYOUT DRAWINGS ARE NOT DESIGNED BY AN ARCHITECT. ADDITIONAL PROFESSIONAL SERVICES MAY BE REQUIRED TO COMPLY WITH LOCAL CODES AND REGULATIONS.
2. TIMBERLYNE IS NOT RESPONSIBLE FOR DESIGNING ELECTRICAL, PLUMBING, AND HVAC PLANS.
3. INTERIOR PARTITION WALLS, WINDOWS, DOORS, AND FIXTURES ARE PROVIDED BY CUSTOMER OR GENERAL CONTRACTOR.
4. DAYLIGHT OPENING, VENT OPENING, AND EGRESS REQUIREMENTS ARE THE RESPONSIBILITY OF THE CUSTOMER/GENERAL CONTRACTOR.
5. DOOR AND WINDOW LOCATIONS ARE APPROX. ONLY. EXACT LOCATION TO BE DETERMINED BY THE CUSTOMER AND GENERAL CONTRACTOR.

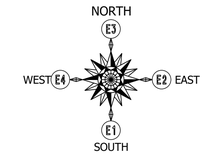

TIMBERLYNE

www.timberlyne.com

Nebraska: 116 West 1st Street
Wayne, NE 68787
888-489-1680
Texas: 613 Hwy 46 E.
Boerne, TX 78006
877-680-1680

© 2021 Timberlyne, All Rights Reserved.
THIS PLAN AND DESIGNS CONTAINED HERIN ARE THE PROPERTY OF TIMBERLYNE GROUP™ AND MAY NOT BE REPRODUCED WITHOUT PRIOR WRITTEN CONSENT FROM TIMBERLYNE GROUP™.

CUSTOMER INFORMATION:

DAN MCENTEE

PROJECT INFORMATION:

MCENTEE GROUP HOME

200&202 SUNDANCE CT
STEAMBOAT SPRINGS,CO 80487

NUMBER:	MGR0524-1
CATEGORY:	Residential
STYLE:	SINGLE SLOPE
OTHER:	--
OTHER:	--
PM:	CM

DRAWING INFORMATION:

DRAWN BY:	BL
DATE:	10/16/24
STATUS:	STRUCTURAL
OTHER:	--
OTHER:	--

SHEET NOTES

SHEET

D201

NOTE: WINDOWS AND DOORS NOT SUPPLIED BY TIMBERLYNE

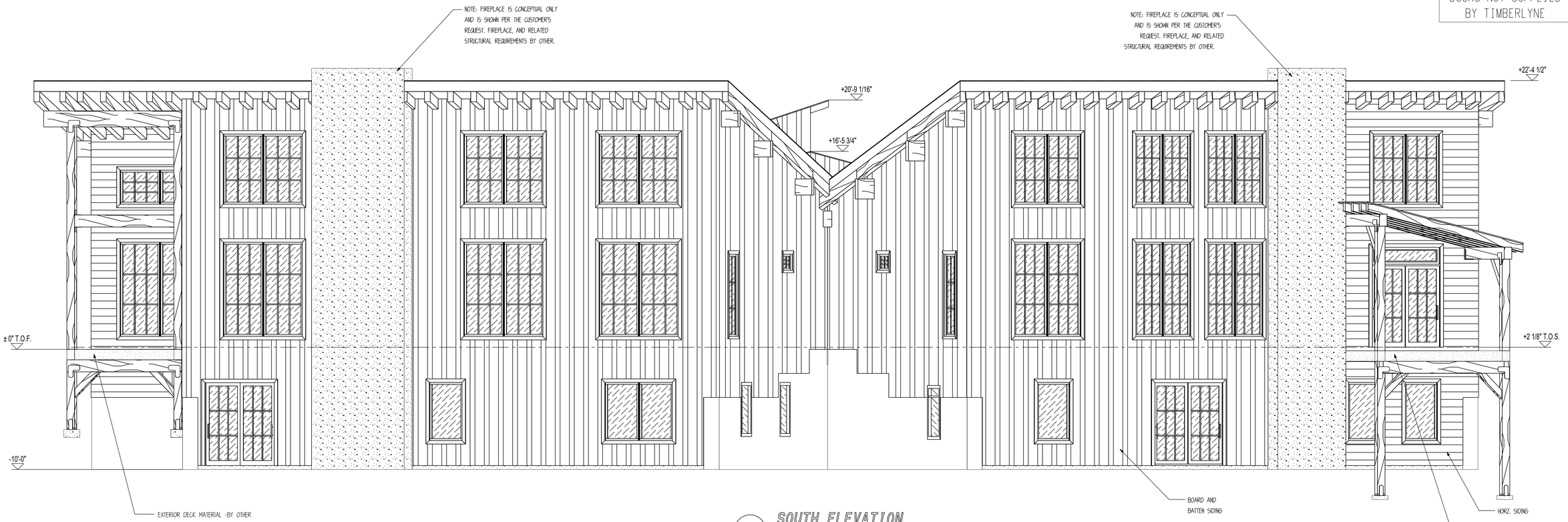

E1 SOUTH ELEVATION

SCALE: 1/4" = 1'

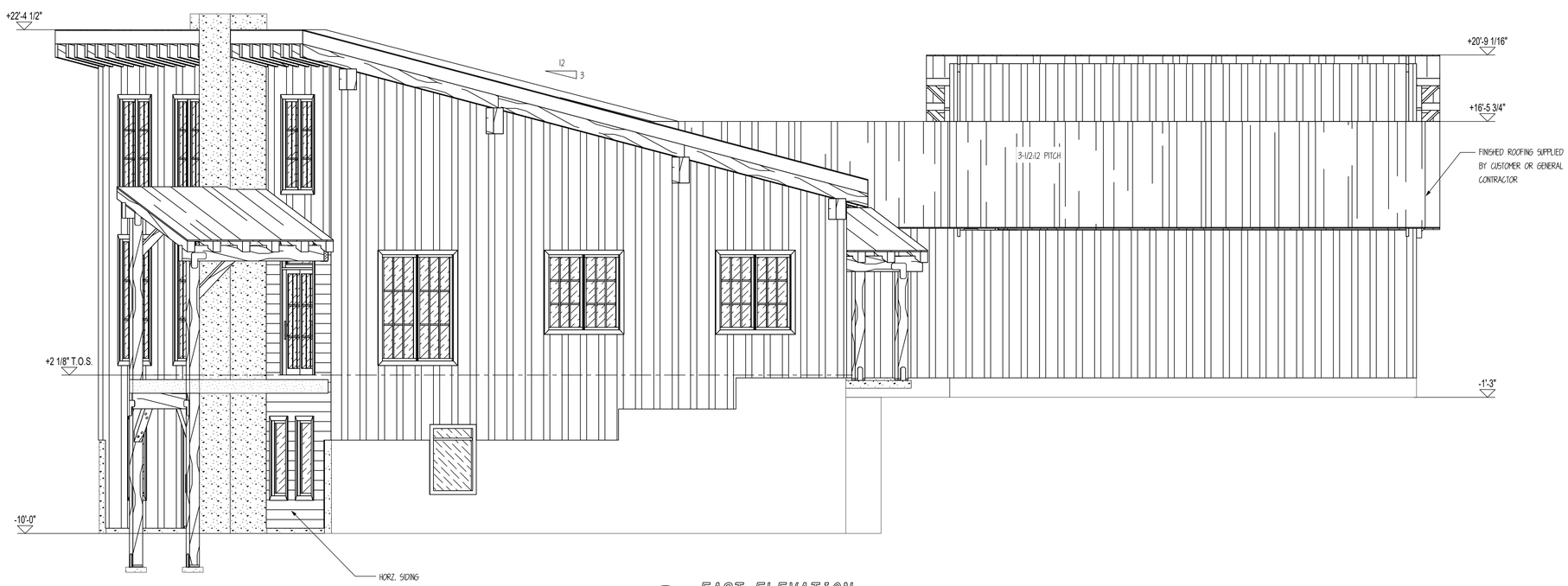

E2 EAST ELEVATION

SCALE: 1/4" = 1'

SHEET NOTES:

1. BREAKER BOARD LOCATION IS APPROX. ONLY AND SHOULD BE INSTALLED ON SITE TO MATCH SIDING LENGTH PROVIDED.
2. DOOR AND WINDOW LOCATIONS ARE APPROX. ONLY. EXACT LOCATIONS TO BE VERIFIED BY CUSTOMER AND GENERAL CONTRACTOR.
3. FINISHED ROOFING MATERIAL TO BE PROVIDED BY CUSTOMER OR GENERAL CONTRACTOR. ROOFING UNDERLAYMENT PROVIDED BY TIMBERLYNE

COLORADO LICENSED
JASON B. LEMIN
32718
PROFESSIONAL ENGINEER

SealPact 2024-10-18 09:57:52 EST
Click seal or scan QR Code for verification, otherwise not valid.

TIMBERLYNE

www.timberlyne.com

Nebraska: 116 West 1st Street
Wayne, NE 68787
888-489-1680
Texas: 613 Hwy 46 E.
Boerne, TX 78006
877-680-1680

© 2021 Timberlyne, All Rights Reserved.
THIS PLAN AND DESIGNS CONTAINED HERIN ARE THE PROPERTY OF TIMBERLYNE GROUP™ AND MAY NOT BE REPRODUCED WITHOUT PRIOR WRITTEN CONSENT FROM TIMBERLYNE GROUP™.

CUSTOMER INFORMATION:

DAN MCENTEE

PROJECT INFORMATION:

MCENTEE GROUP HOME

200&202 SUNDANCE CT
STEAMBOAT SPRINGS,CO 80487

NUMBER:	MGR0524-1
CATEGORY:	Residential
STYLE:	SINGLE SLOPE
OTHER:	--
OTHER:	--
PM:	CM

DRAWING INFORMATION:

DRAWN BY:	BL
DATE:	10/16/24
STATUS:	STRUCTURAL
OTHER:	--
OTHER:	--

SHEET NOTES

SHEET

D300

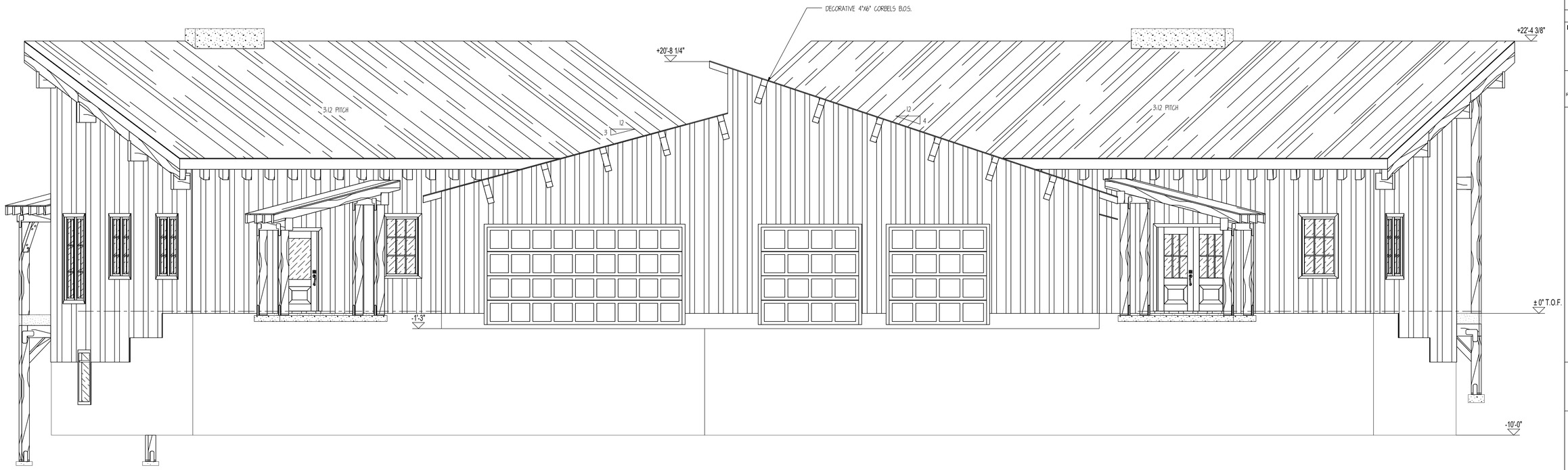

E3 NORTH ELEVATION

SCALE: 1/4" = 1'

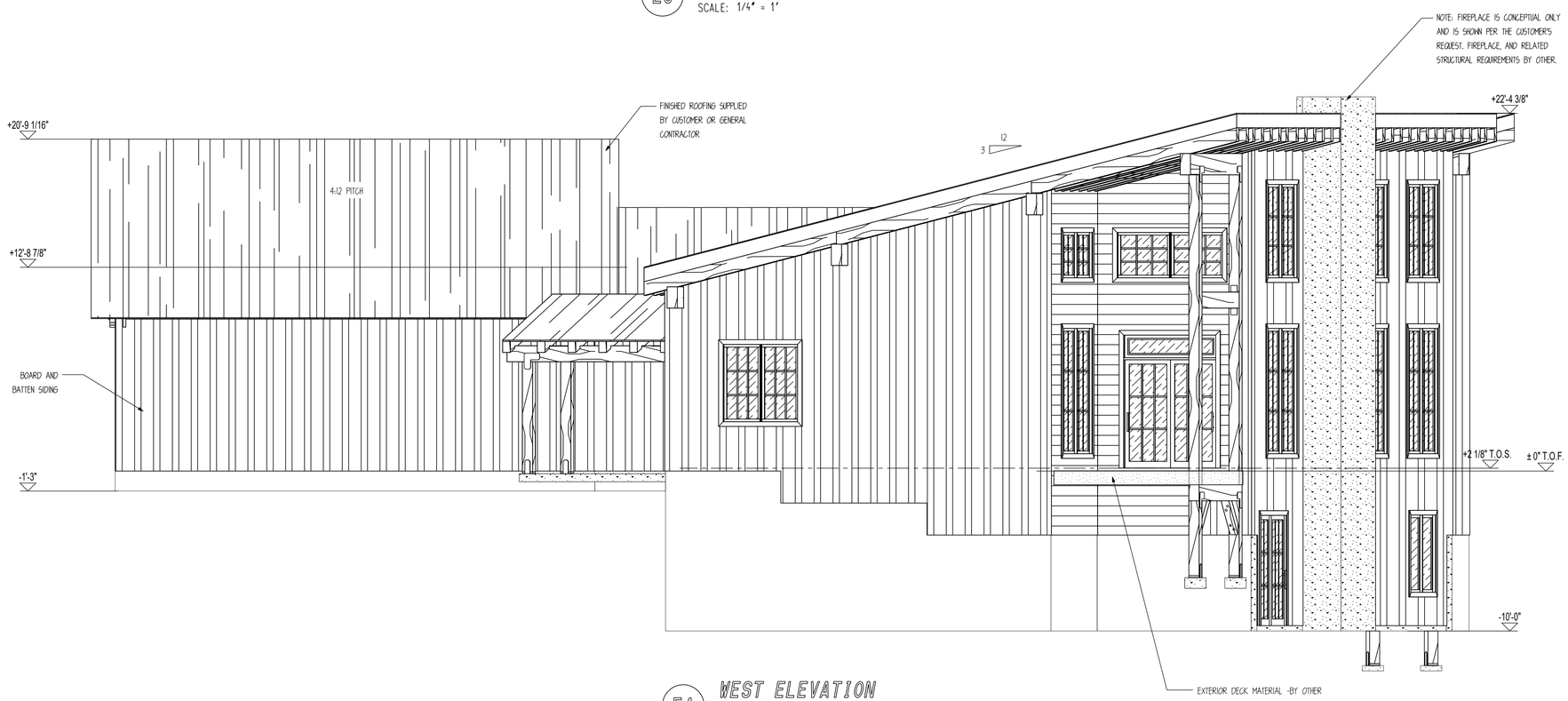

E4 WEST ELEVATION

SCALE: 1/4" = 1'

COLORADO LICENSED
BRYAN B. UZMANN
32718
PROFESSIONAL ENGINEER

SealPact 2024-10-18 09:57:52 EST
Click seal or scan QR Code for verification; otherwise not valid.

SHEET NOTES:
1. BREAKER BOARD LOCATION IS APPROX. ONLY AND SHOULD BE INSTALLED ON SITE TO MATCH SIDING LENGTH PROVIDED.
2. DOOR AND WINDOW LOCATIONS ARE APPROX. ONLY. EXACT LOCATIONS TO BE VERIFIED BY CUSTOMER AND GENERAL CONTRACTOR.
3. FINISHED ROOFING MATERIAL TO BE PROVIDED BY CUSTOMER OR GENERAL CONTRACTOR. ROOFING UNDERLAYMENT PROVIDED BY TIMBERLYNE

TIMBERLYNE

www.timberlyne.com

Nebraska: 116 West 1st Street
Wayne, NE 68787
888-489-1680
Texas: 613 Hwy 46 E.
Boerne, TX 78006
877-680-1680

© 2021 Timberlyne, All Rights Reserved.
THIS PLAN AND DESIGNS CONTAINED HERIN ARE THE PROPERTY OF TIMBERLYNE GROUP™ AND MAY NOT BE REPRODUCED WITHOUT PRIOR WRITTEN CONSENT FROM TIMBERLYNE GROUP™.

CUSTOMER INFORMATION:

DAN
MCENTEE

PROJECT INFORMATION:

MCENTEE GROUP
HOME

200&202 SUNDANCE CT
STEAMBOAT SPRINGS,CO 80487

NUMBER:	MGR0524-1
CATEGORY:	Residential
STYLE:	SINGLE SLOPE
OTHER:	--
OTHER:	--
PM:	CM

DRAWING INFORMATION:

DRAWN BY:	BL
DATE:	10/16/24
STATUS:	STRUCTURAL
OTHER:	--
OTHER:	--

SHEET NOTES

SHEET

D301

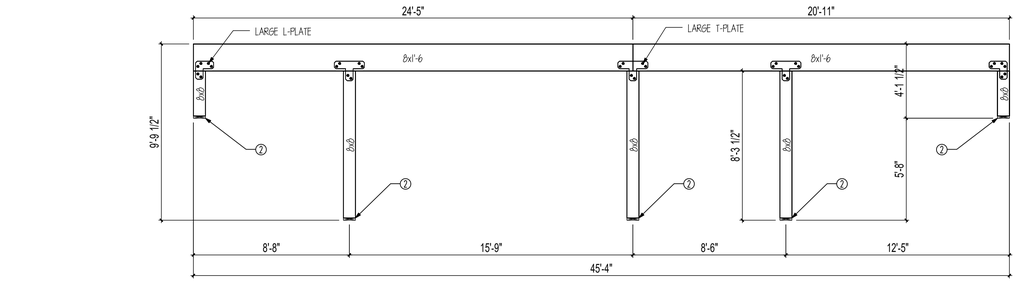

GIRDER 1

SCALE: 1/4" = 1'

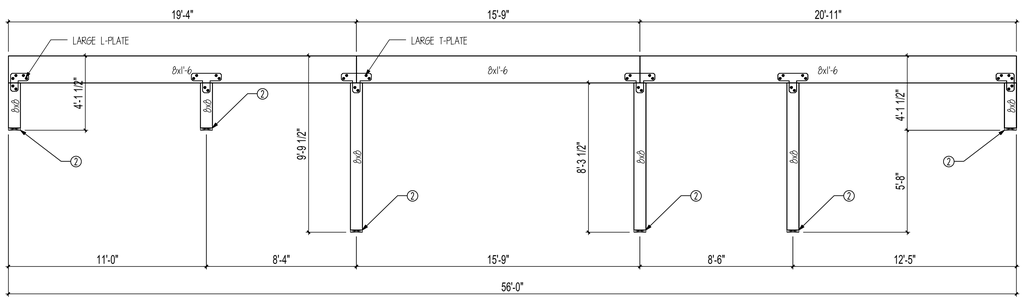

GIRDER 2

SCALE: 1/4" = 1'

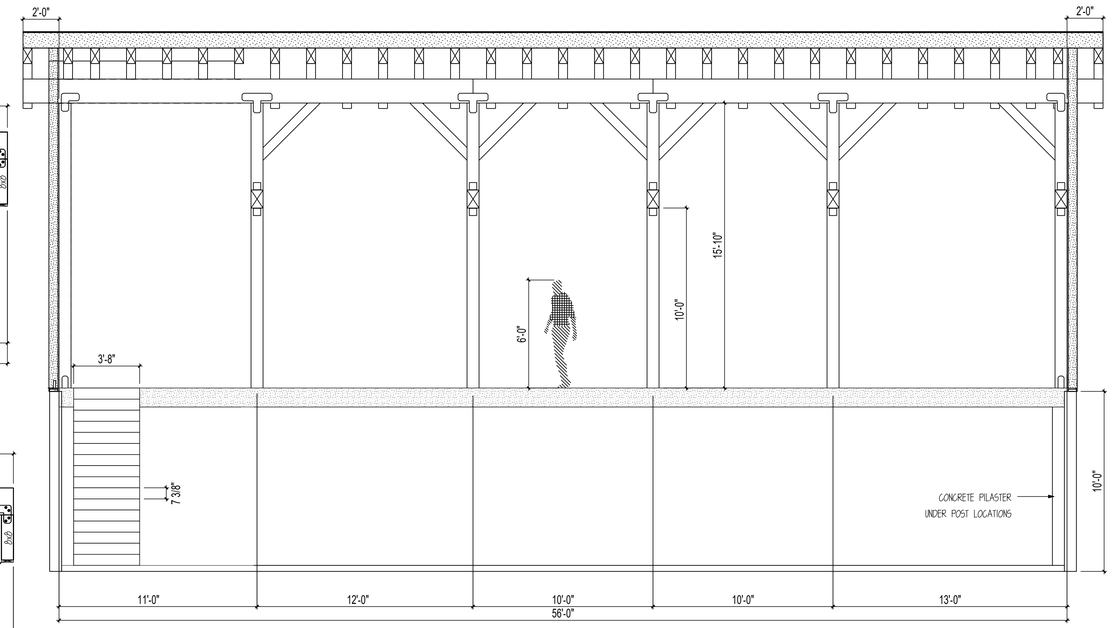

RUSHMORE STAIR SECTION

SCALE: 1/4" = 1'

RUSHMORE

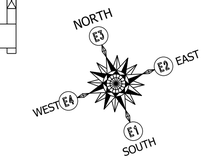

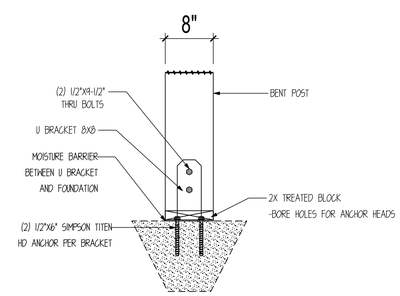

2 POST CONNECTION DETAIL

SCALE : 1" =1'-0"

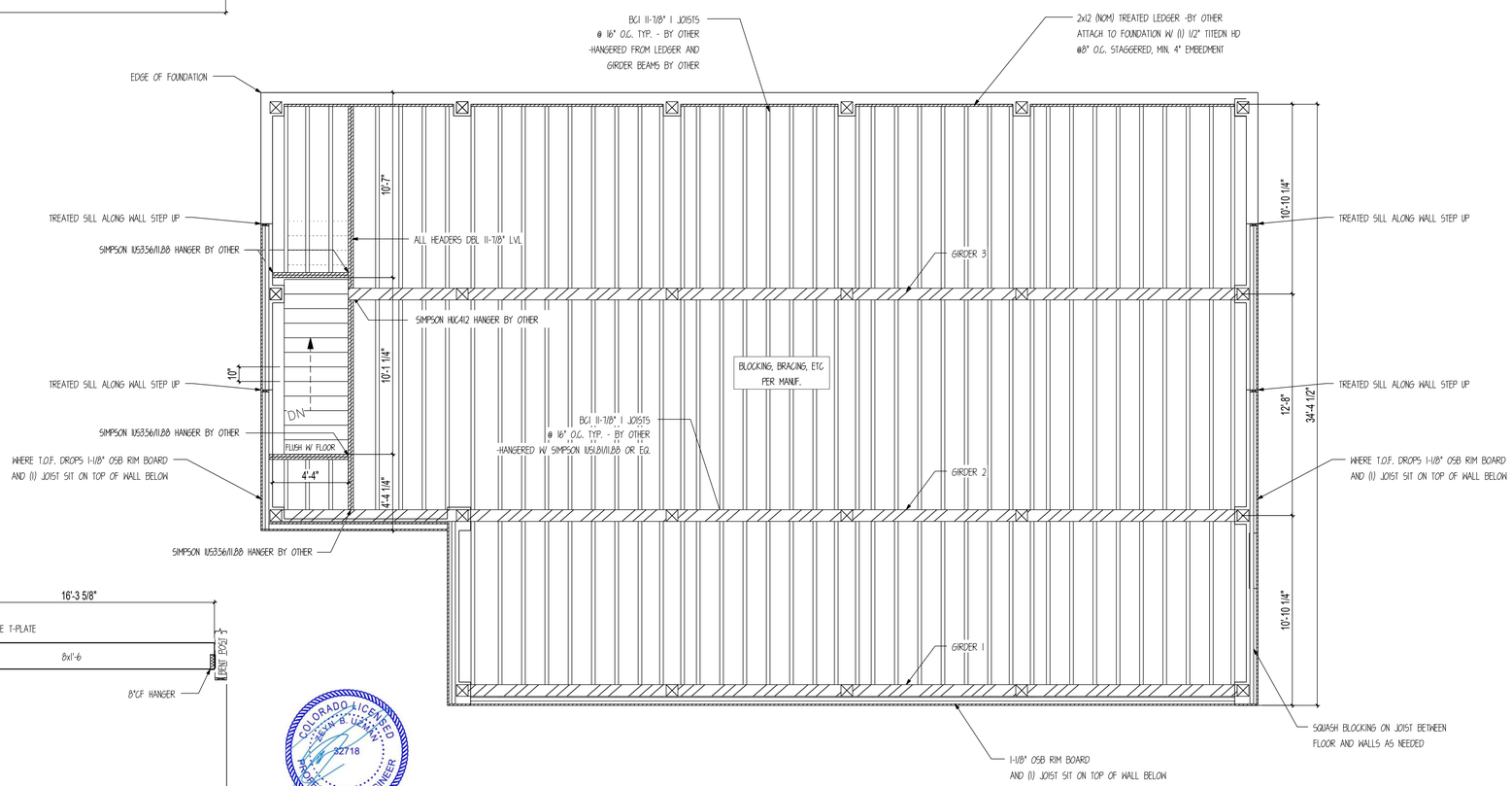

MAIN FRAMING PLAN

SCALE: 1/4" = 1'

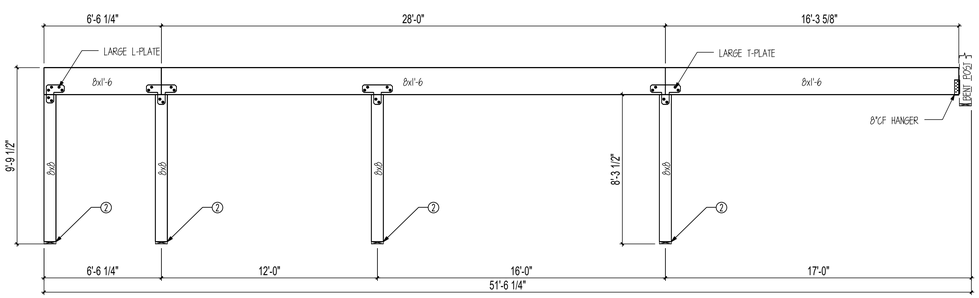

GIRDER 3

SCALE: 1/4" = 1'

COLORADO LICENSED
JAZAN B. UZMAN
32718
PROFESSIONAL ENGINEER

SealPact 2024-10-18 09:57:52 EST
Click seal or scan QR Code for verification; otherwise not valid.

TIMBERLYNE

www.timberlyne.com

Nebraska: 116 West 1st Street
Wayne, NE 68787
888-489-1680
Texas: 613 Hwy 46 E.
Boerne, TX 78006
877-680-1680

© 2021 Timberlyne, All Rights Reserved.
THIS PLAN AND DESIGNS CONTAINED HERIN ARE THE PROPERTY OF TIMBERLYNE GROUP™ AND MAY NOT BE REPRODUCED WITHOUT PRIOR WRITTEN CONSENT FROM TIMBERLYNE GROUP™.

CUSTOMER INFORMATION:

DAN MCENTEE

PROJECT INFORMATION:

MCENTEE GROUP HOME

200&202 SUNDANCE CT
STEAMBOAT SPRINGS,CO 80487

NUMBER:	MGR0524-1
CATEGORY:	Residential
STYLE:	SINGLE SLOPE
OTHER:	--
OTHER:	--
PM:	CM

DRAWING INFORMATION:

DRAWN BY:	BL
DATE:	10/16/24
STATUS:	STRUCTURAL
OTHER:	--
OTHER:	--

SHEET NOTES

1. INSTALL BLOCKING BETWEEN JOISTS @ ALL ENDS.
2. ALL HANGERS SUPPLIED BY OTHER
3. CUT JOISTS TO SIZE ON SITE

SHEET

S200

RUSHMORE

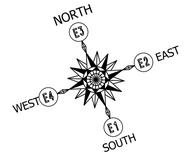

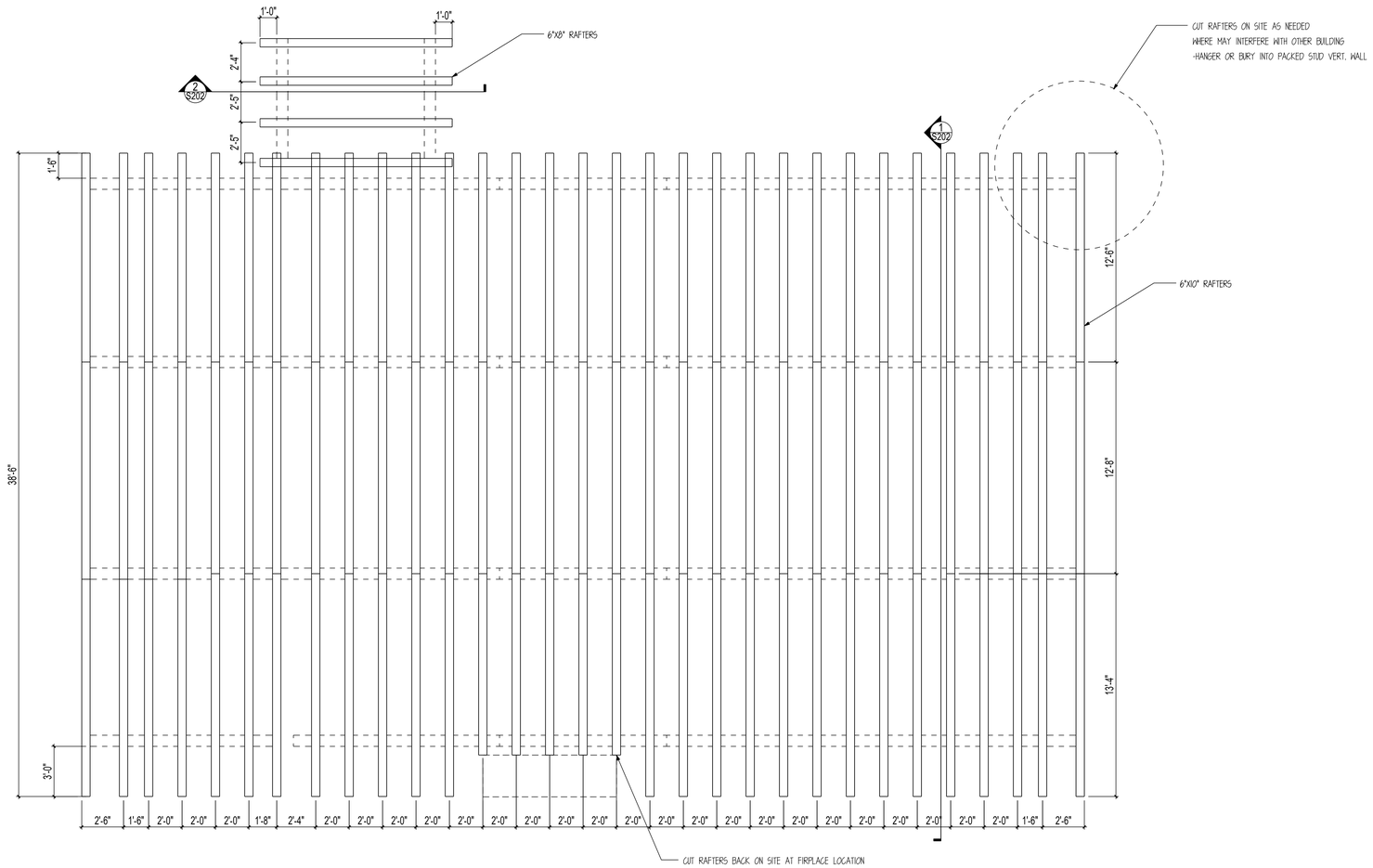

ROOF FRAMING PLAN

SCALE: 1/4" = 1'

COLORADO LICENSED
STEVEN B. UZEMAN
32718
PROFESSIONAL ENGINEER

SealPact 2024-10-18 09:57:52 EST
Click seal or scan QR Code for verification; otherwise not valid.

TIMBERLYNE

www.timberlyne.com

Nebraska: 116 West 1st Street
Wayne, NE 68787
888-489-1680
Texas: 613 Hwy 46 E.
Boerne, TX 78006
877-680-1680

© 2021 Timberlyne, All Rights Reserved.
THIS PLAN AND DESIGNS CONTAINED HERIN ARE THE PROPERTY OF TIMBERLYNE GROUP™ AND MAY NOT BE REPRODUCED WITHOUT PRIOR WRITTEN CONSENT FROM TIMBERLYNE GROUP™.

CUSTOMER INFORMATION:

DAN MCENTEE

PROJECT INFORMATION:

MCENTEE GROUP HOME

200&202 SUNDANCE CT
STEAMBOAT SPRINGS,CO 80487

NUMBER:	MGR0524-1
CATEGORY:	Residential
STYLE:	SINGLE SLOPE
OTHER:	--
OTHER:	--
PM:	CM

DRAWING INFORMATION:

DRAWN BY:	BL
DATE:	10/16/24
STATUS:	STRUCTURAL
OTHER:	--
OTHER:	--

SHEET NOTES

1. INSTALL BLOCKING BETWEEN JOISTS @ ALL ENDS.
2. ALL HANGERS SUPPLIED BY OTHER
3. CUT JOISTS TO SIZE ON SITE

SHEET

S201

RUSHMORE

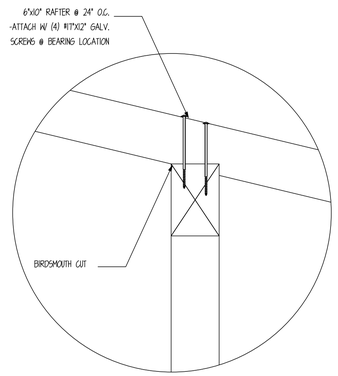

M RAFTER ATTACHMENT DETAIL
SCALE: 1" = 1'

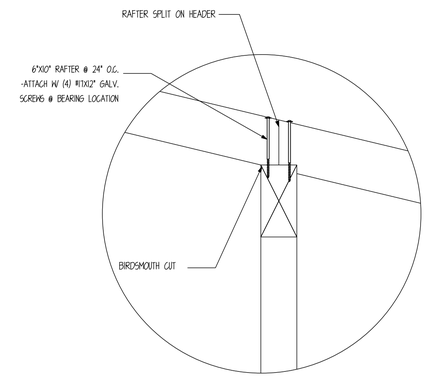

N RAFTER SPLIT ATTACHMENT DETAIL
SCALE: 1" = 1'

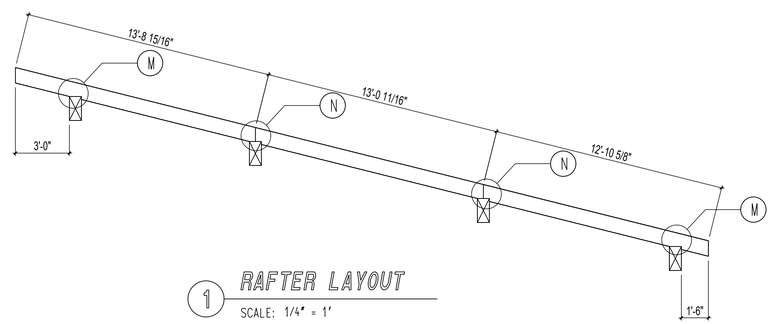

1 RAFTER LAYOUT
SCALE: 1/4" = 1'

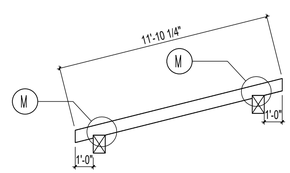

2 RAFTER LAYOUT
SCALE: 1/4" = 1'

COLORADO LICENSED
JOHN B. UZMANN
32718
PROFESSIONAL ENGINEER

SealPact 2024-10-18 09:57:52 EST
Click seal or scan QR Code for verification; otherwise not valid.

TIMBERLYNE

www.timberlyne.com

Nebraska: 116 West 1st Street
Wayne, NE 68787
888-489-1680
Texas: 613 Hwy 46 E.
Boerne, TX 78006
877-680-1680

© 2021 Timberlyne, All Rights Reserved.
THIS PLAN AND DESIGNS CONTAINED HERIN ARE THE PROPERTY OF TIMBERLYNE GROUP™ AND MAY NOT BE REPRODUCED WITHOUT PRIOR WRITTEN CONSENT FROM TIMBERLYNE GROUP™.

CUSTOMER INFORMATION:

DAN MCENTEE

PROJECT INFORMATION:

MCENTEE GROUP HOME

200&202 SUNDANCE CT
STEAMBOAT SPRINGS,CO 80487

NUMBER:	MGR0524-1
CATEGORY:	Residential
STYLE:	SINGLE SLOPE
OTHER:	--
OTHER:	--
PM:	CM

DRAWING INFORMATION:

DRAWN BY:	BL
DATE:	10/16/24
STATUS:	STRUCTURAL
OTHER:	--
OTHER:	--

SHEET NOTES

SHEET

S202

RUSHMORE

NOTE: EXTERIOR FLASHING TO BE INSTALLED AT ALL CONNECTIONS BETWEEN ROOFS, WALLS, AND PROJECTIONS OR PENETRATIONS AS REQUIRED BY GOOD CONSTRUCTION PRACTICES. FLASHING MATERIALS AND DETAILS TO BE PROVIDED BY CUSTOMER OR GENERAL CONTRACTOR.

NOTE: ALL OSB SHEATHING TO BE APA RATED SHEATHING W/ SPAN RATING OF 32/16 INSTALLED PERP. TO SUPPORTS

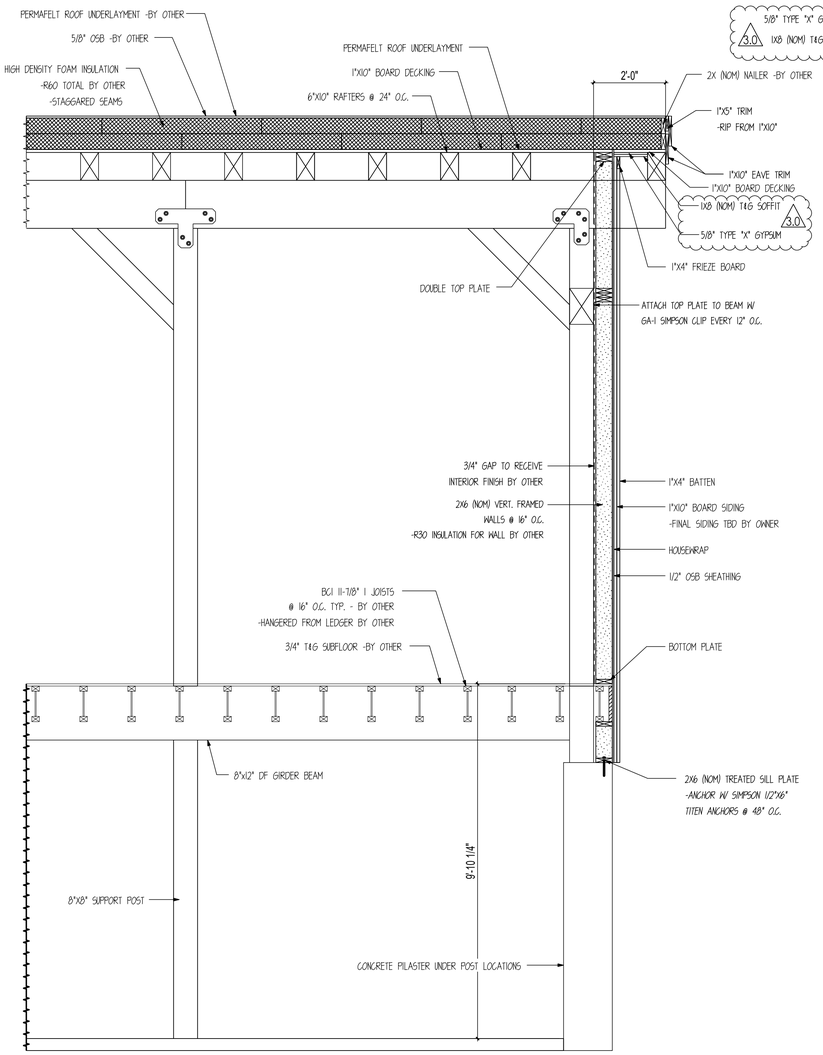

A **HOME EXTERIOR WALL SECTION**
SCALE : 1/2" = 1'

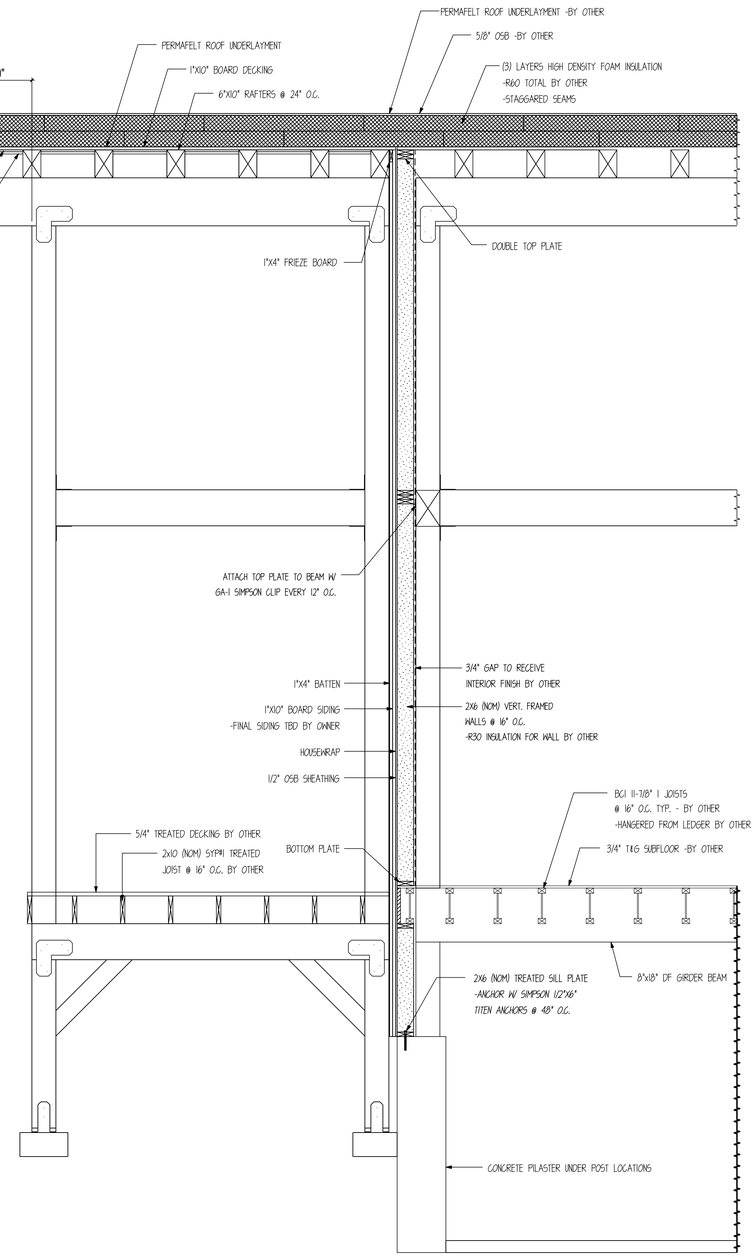

B **HOME EXTERIOR WALL SECTION**
SCALE : 1/2" = 1'

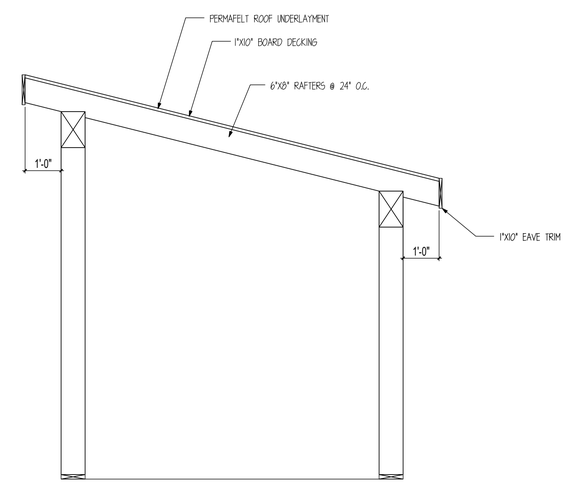

C **COVERED ENTRY SECTION**
SCALE : 1/2" = 1'

COLORADO LICENSED
BRIAN R. LUEMAN
32718
PROFESSIONAL ENGINEER

SealPact 2024-10-18 09:57:52 EST
Click seal or scan QR Code for verification; otherwise not valid.

TIMBERLYNE

www.timberlyne.com

Nebraska: 116 West 1st Street
Wayne, NE 68787
888-489-1680
Texas: 613 Hwy 46 E.
Boerne, TX 78006
877-680-1680

© 2021 Timberlyne, All Rights Reserved.
THIS PLAN AND DESIGNS CONTAINED HERIN ARE THE PROPERTY OF TIMBERLYNE GROUP™ AND MAY NOT BE REPRODUCED WITHOUT PRIOR WRITTEN CONSENT FROM TIMBERLYNE GROUP™.

CUSTOMER INFORMATION:

DAN MCENTEE

PROJECT INFORMATION:

MCENTEE GROUP HOME

200&202 SUNDANCE CT
STEAMBOAT SPRINGS,CO 80487

NUMBER:	MGR0524-1
CATEGORY:	Residential
STYLE:	SINGLE SLOPE
OTHER:	--
OTHER:	--
PM:	CM

DRAWING INFORMATION:

DRAWN BY:	BL
DATE:	10/16/24
STATUS:	STRUCTURAL
OTHER:	--
OTHER:	--

SHEET NOTES

SHEET

S300

RUSHMORE

NOTE: ALL OSB SHEATHING TO BE APA RATED SHEATHING W/ SPAN RATING OF 32/16 INSTALLED PERP. TO SUPPORTS

NOTE: EXTERIOR FLASHING TO BE INSTALLED AT ALL CONNECTIONS BETWEEN ROOFS, WALLS, AND PROJECTIONS OR PENETRATIONS AS REQUIRED BY GOOD CONSTRUCTION PRACTICES. FLASHING MATERIALS AND DETAILS TO BE PROVIDED BY CUSTOMER OR GENERAL CONTRACTOR.

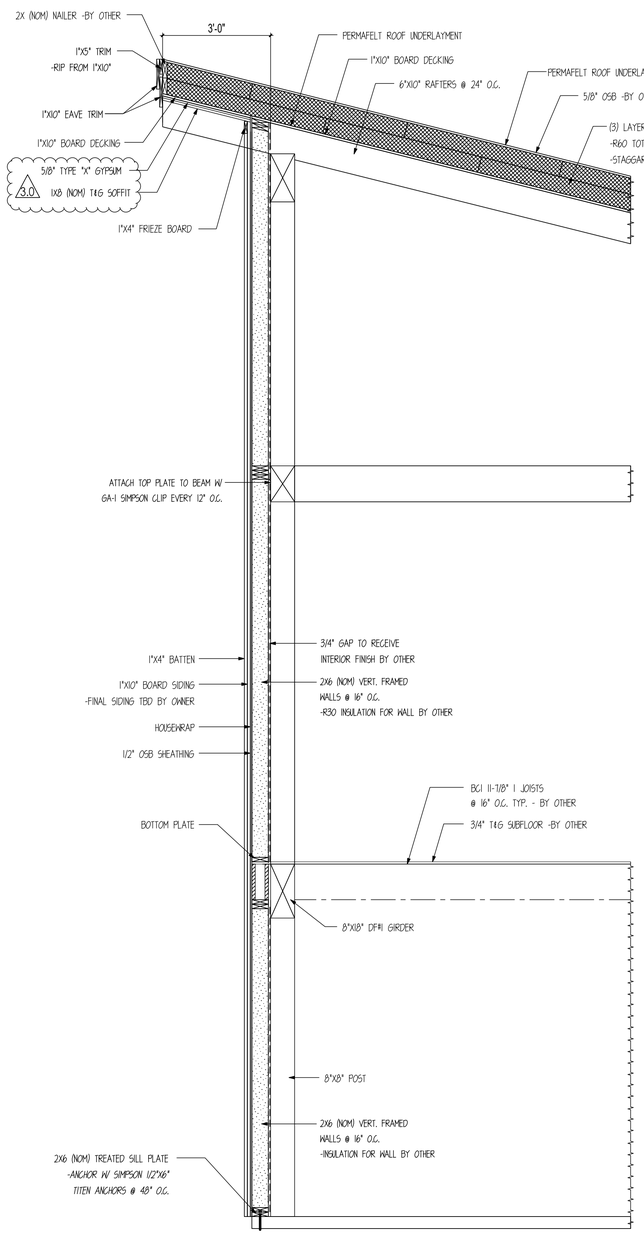

D **HOME EXTERIOR WALL SECTION**

SCALE : 1/2" = 1'

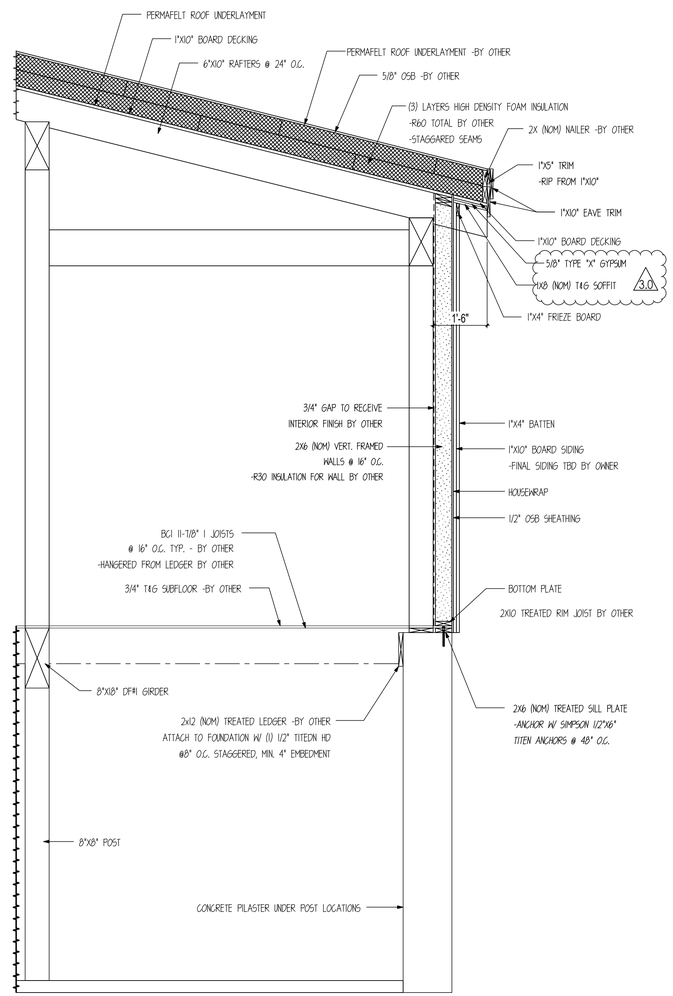

E **HOME EXTERIOR WALL SECTION**

SCALE : 1/2" = 1'

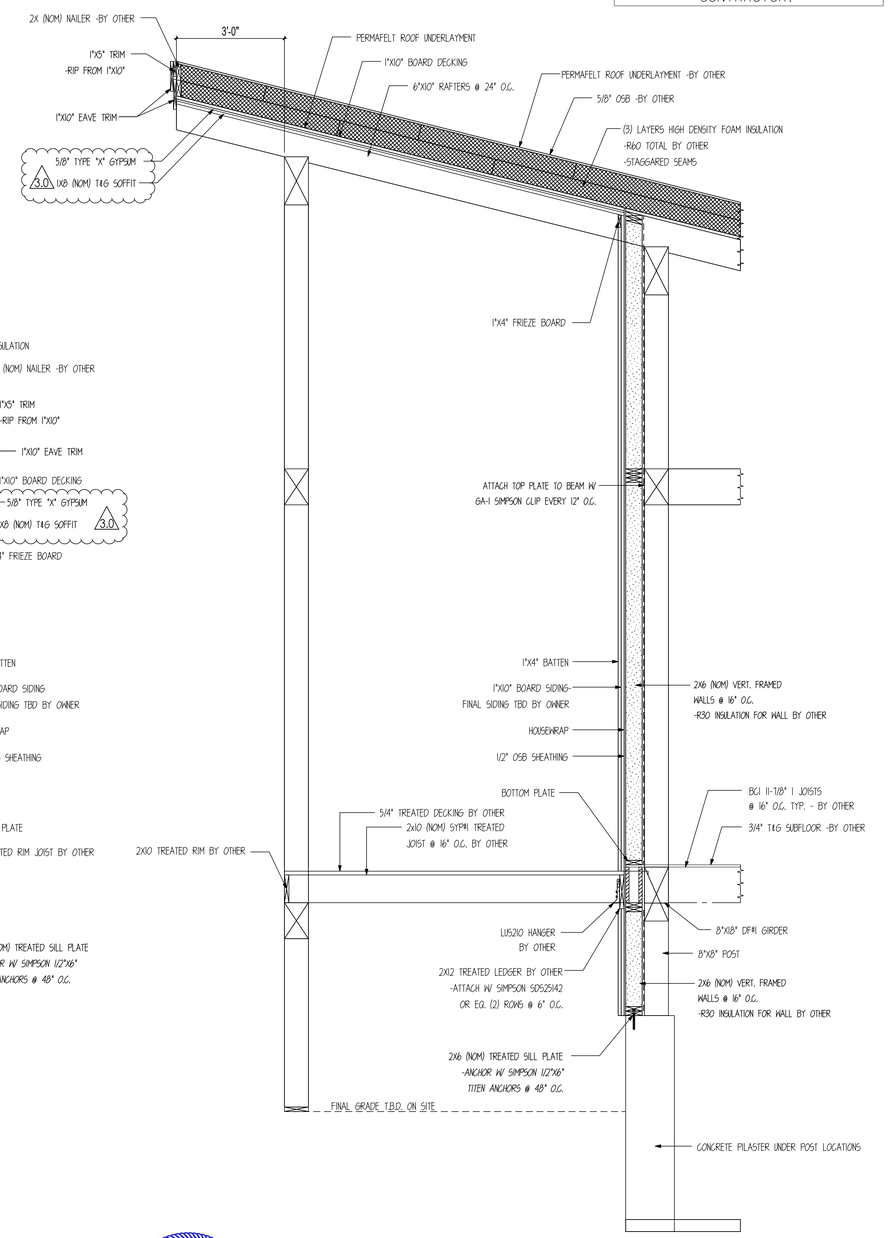

F **HOME EXTERIOR WALL SECTION**

SCALE : 1/2" = 1'

COLORADO LICENSED
BRIAN B. LUMAN
32718
PROFESSIONAL ENGINEER

SealPact 2024-10-18 09:57:52 EST
Click seal or scan QR Code for verification; otherwise not valid.

TIMBERLYNE

www.timberlyne.com

Nebraska: 116 West 1st Street
Wayne, NE 68787
888-489-1680
Texas: 613 Hwy 46 E.
Boerne, TX 78006
877-680-1680

© 2021 Timberlyne, All Rights Reserved.
THIS PLAN AND DESIGNS CONTAINED HERIN ARE THE PROPERTY OF TIMBERLYNE GROUP™ AND MAY NOT BE REPRODUCED WITHOUT PRIOR WRITTEN CONSENT FROM TIMBERLYNE GROUP™.

CUSTOMER INFORMATION:

DAN MCENTEE

PROJECT INFORMATION:

MCENTEE GROUP HOME

200&202 SUNDANCE CT
STEAMBOAT SPRINGS,CO 80487

NUMBER:	MGR0524-1
CATEGORY:	Residential
STYLE:	SINGLE SLOPE
OTHER:	--
OTHER:	--
PM:	CM

DRAWING INFORMATION:

DRAWN BY:	BL
DATE:	10/16/24
STATUS:	STRUCTURAL
OTHER:	--
OTHER:	--

SHEET NOTES

SHEET

S301

STANDARD STEEL JOINERY

PLATES

-USE PROVIDED ZINC COATED 1/2"X4-1/2" THRU BOLTS (A307 MIN) W/ WASHERS

-2 PLATES ARE USED PLACE 1 PLATE ON EACH SIDE OF BENT UNLESS NOTED OTHERWISE ON PLANS

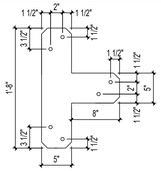

LARGE T-PLATE
1/4" A36 STEEL

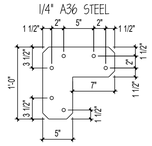

LARGE L-PLATE
1/4" A36 STEEL

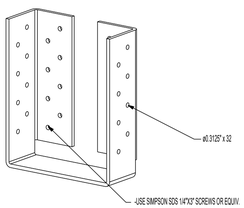

8" CF HANGER
1/4" A36 STEEL

BRACKETS

-USE PROVIDED ZINC COATED 1/2" DIA. LAG BOLTS (GRADE 5 MIN)

-1/2"X6" SIMPSON TITEN HD ZINC COATED ANCHORS @ FOUNDATION

-USE PROVIDED ZINC COATED 1/2"X4-1/2" THRU BOLTS (A307 MIN)

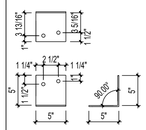

SILL BRACKET
3/16" A36 STEEL

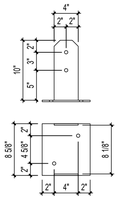

U BRACKET 8X8
1/4" A36 STEEL

SCREW ATTACHMENT DETAIL

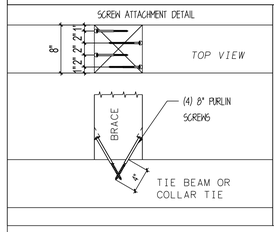

SCREW ATTACHMENT DETAIL

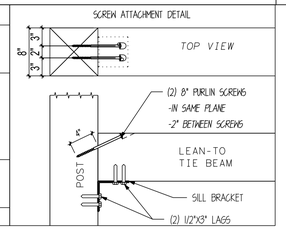

8" PURLIN SCREWS (CONSTRUCTION LAG SCREW)
THREAD DIA: #17 OR .310
HEAD DIA: 11/16"
SHANK DIA: .226
RECESS SIZE: T40

10" PURLIN SCREWS (CONSTRUCTION LAG SCREW)
THREAD DIA: #17 OR .310
HEAD DIA: 11/16"
SHANK DIA: .226
RECESS SIZE: T40

RUSHMORE

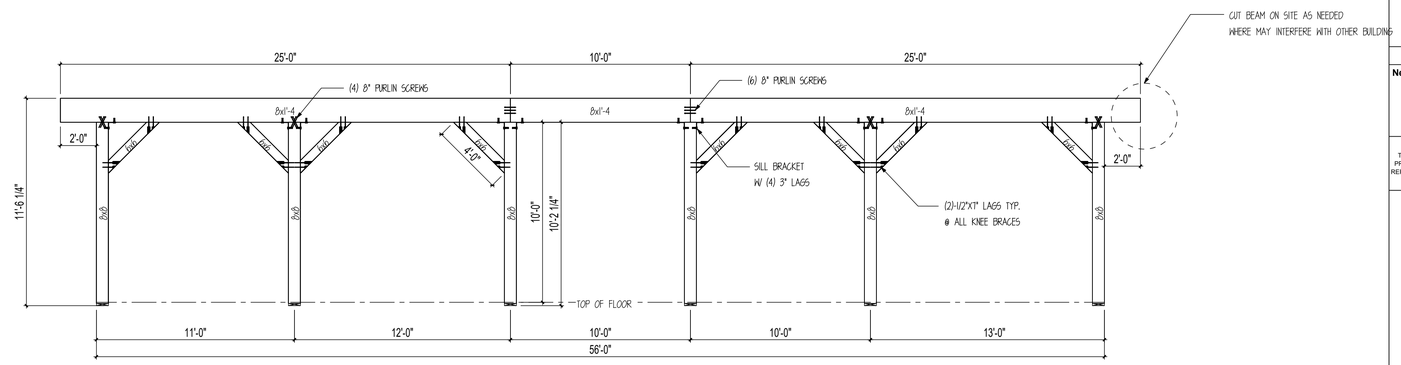

BENT #1
SCALE: 1/4" = 1'

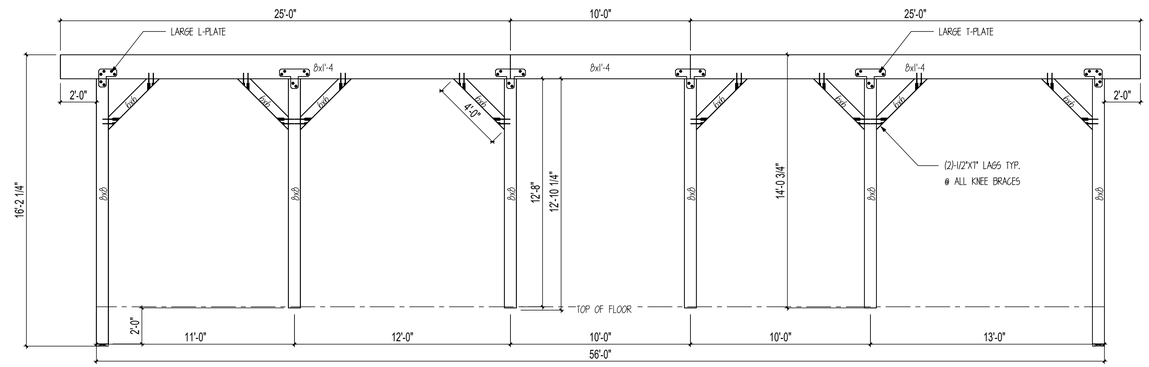

BENT #2
SCALE: 1/4" = 1'

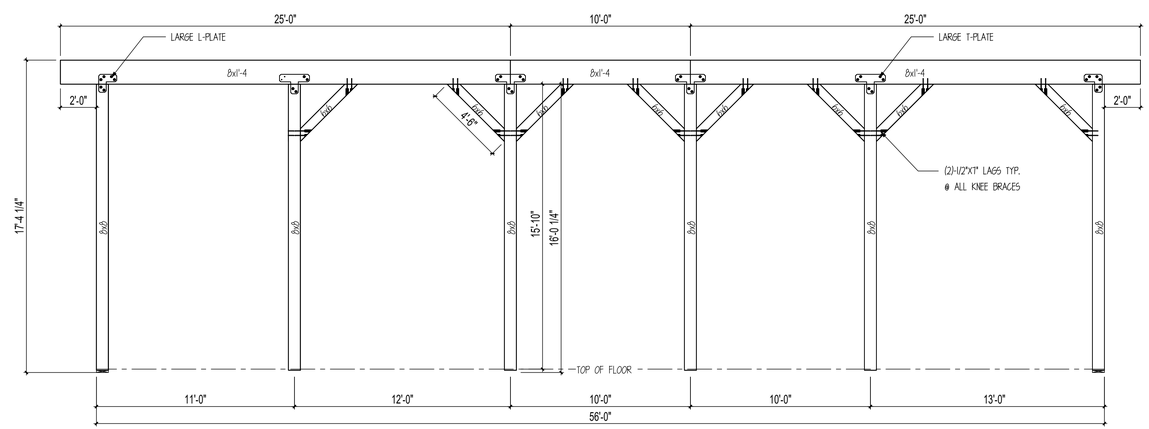

BENT #3
SCALE: 1/4" = 1'

COLORADO LICENSED
JASON B. UZZAN
32718
PROFESSIONAL ENGINEER

SealPact 2024-10-18 09:57:52 EST
Click seal or scan QR Code for verification; otherwise not valid.

TIMBERLYNE

www.timberlyne.com

Nebraska: 116 West 1st Street
Wayne, NE 68787
888-489-1680
Texas: 613 Hwy 46 E.
Boerne, TX 78006
877-680-1680

© 2021 Timberlyne, All Rights Reserved.
THIS PLAN AND DESIGNS CONTAINED HERIN ARE THE PROPERTY OF TIMBERLYNE GROUP™ AND MAY NOT BE REPRODUCED WITHOUT PRIOR WRITTEN CONSENT FROM TIMBERLYNE GROUP™.

CUSTOMER INFORMATION:

DAN MCENTEE

PROJECT INFORMATION:

MCENTEE GROUP HOME

200&202 SUNDANCE CT
STEAMBOAT SPRINGS,CO 80487

NUMBER:	MGR0524-1
CATEGORY:	Residential
STYLE:	SINGLE SLOPE
OTHER:	--
OTHER:	--
PM:	CM

DRAWING INFORMATION:

DRAWN BY:	BL
DATE:	10/16/24
STATUS:	STRUCTURAL
OTHER:	--
OTHER:	--

SHEET NOTES

1. BASE OF MAIN FRAME POST CUT TO FIT IN FIELD BY GENERAL CONTRACTOR ACCORDING TO SPECS ON CUT LISTS. CUT BOTTOM OF POST ONLY.

SHEET

S400

RUSHMORE

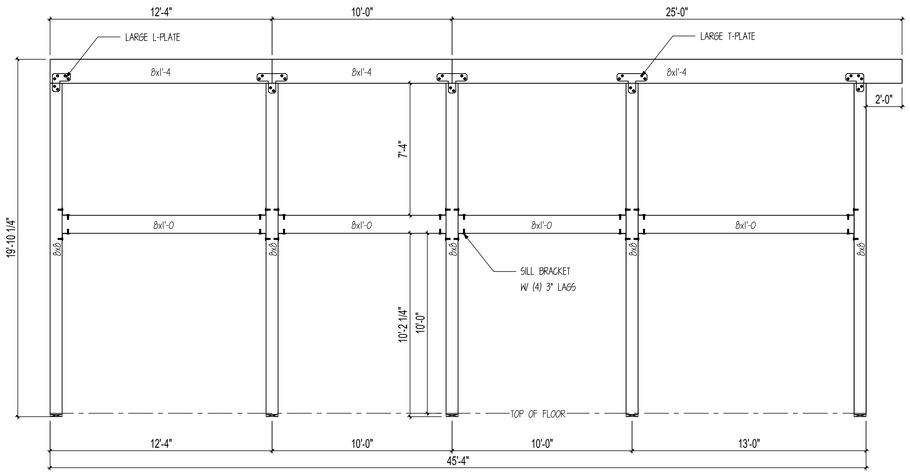

BENT #4
SCALE: 1/4" = 1'

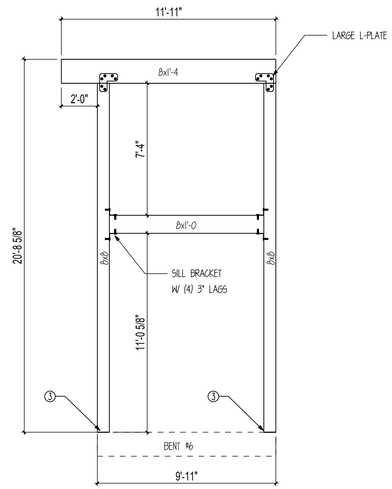

BENT #5
SCALE: 1/4" = 1'

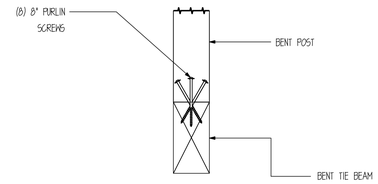

3 **POST CONNECTION DETAIL**
SCALE : 1" =1'-0"

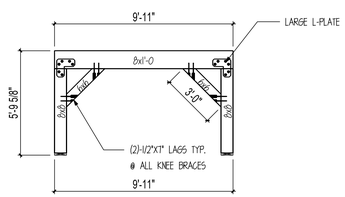

BENT #6
SCALE: 1/4" = 1'

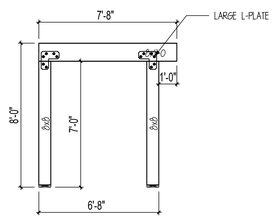

BENT #7
SCALE: 1/4" = 1'

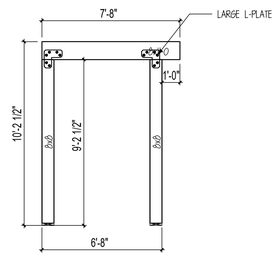

BENT #8
SCALE: 1/4" = 1'

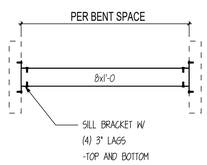

BENT SPACER 1
SCALE: 1/4" = 1'

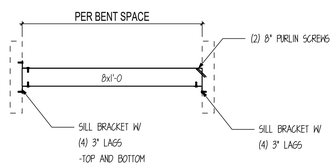

BENT SPACER 2
SCALE: 1/4" = 1'

COLORADO LICENSED
KEVIN B. UZEMAN
32718
PROFESSIONAL ENGINEER

SealPact 2024-10-18 09:57:52 EST
Click seal or scan QR Code for verification; otherwise not valid.

TIMBERLYNE

www.timberlyne.com

Nebraska: 116 West 1st Street
Wayne, NE 68787
888-489-1680
Texas: 613 Hwy 46 E.
Boerne, TX 78006
877-680-1680

© 2021 Timberlyne, All Rights Reserved.
THIS PLAN AND DESIGNS CONTAINED HERIN ARE THE PROPERTY OF TIMBERLYNE GROUP™ AND MAY NOT BE REPRODUCED WITHOUT PRIOR WRITTEN CONSENT FROM TIMBERLYNE GROUP™.

CUSTOMER INFORMATION:

DAN
MCENTEE

PROJECT INFORMATION:

MCENTEE GROUP
HOME

200&202 SUNDANCE CT
STEAMBOAT SPRINGS,CO 80487

NUMBER:	MGR0524-1
CATEGORY:	Residential
STYLE:	SINGLE SLOPE
OTHER:	--
OTHER:	--
PM:	CM

DRAWING INFORMATION:

DRAWN BY:	BL
DATE:	10/16/24
STATUS:	STRUCTURAL
OTHER:	--
OTHER:	--

SHEET NOTES

1. BASE OF MAIN FRAME POST CUT TO FIT IN FIELD BY GENERAL CONTRACTOR ACCORDING TO SPECS ON CUT LISTS. CUT BOTTOM OF POST ONLY.

SHEET

S401

RUSHMORE

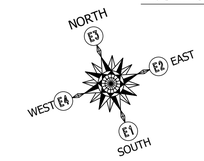

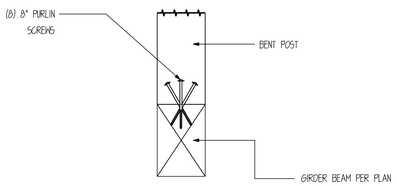

1 POST CONNECTION DETAIL

SCALE : 1" =1'-0"

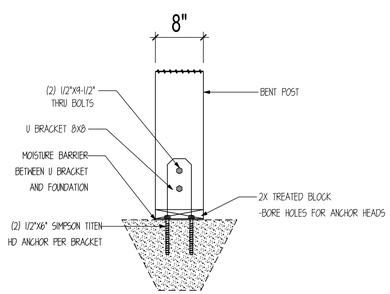

2 POST CONNECTION DETAIL

SCALE : 1" =1'-0"

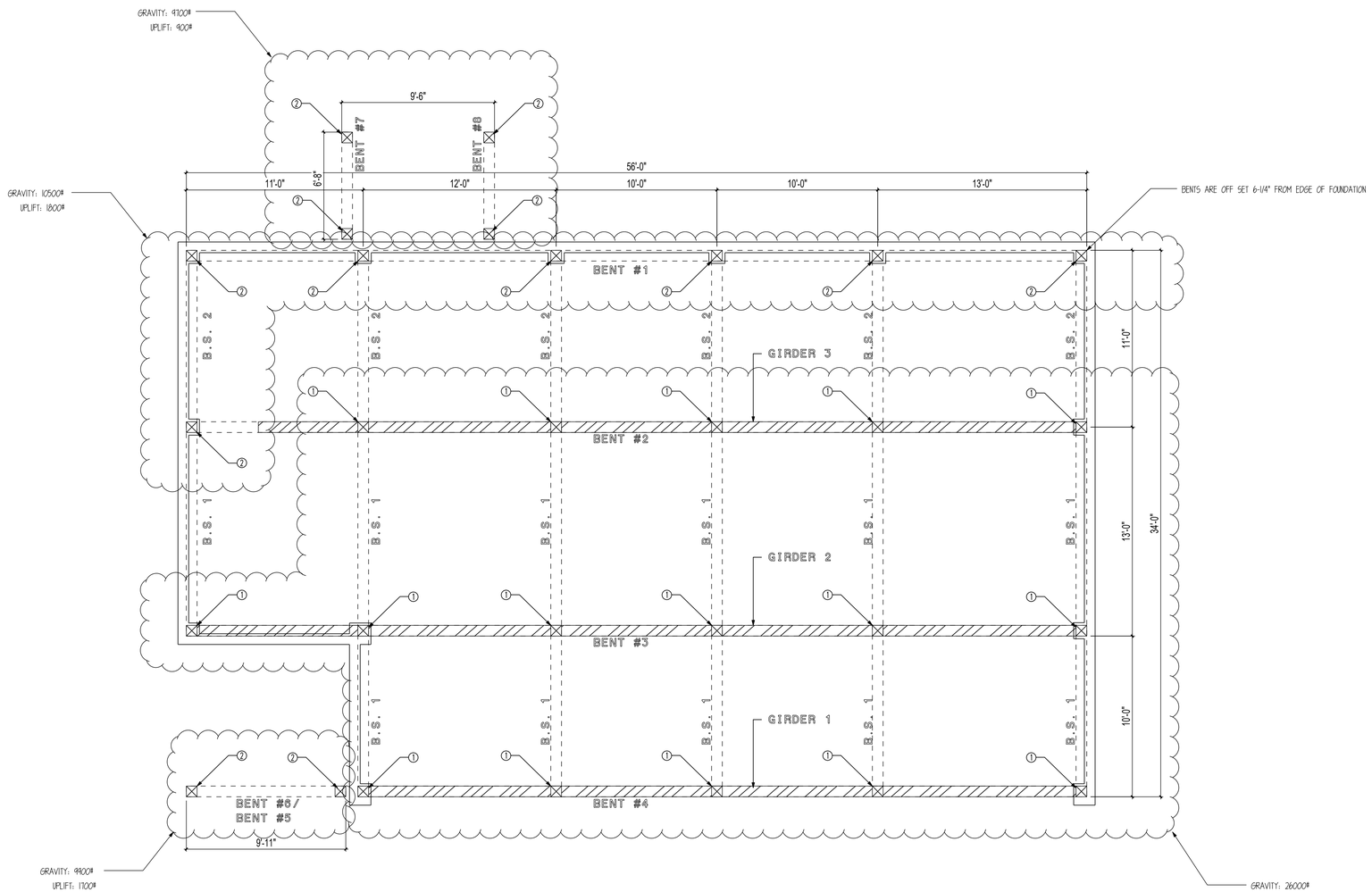

BENT LAYOUT

SCALE: 1/4" = 1'

COLORADO LICENSED
BRIAN B. LIZAMA
32718
PROFESSIONAL ENGINEER

SealPact 2024-10-18 09:57:53 EST
Click seal or scan QR Code for verification; otherwise not valid.

TIMBERLYNE

www.timberlyne.com

Nebraska: 116 West 1st Street
Wayne, NE 68787
888-489-1680
Texas: 613 Hwy 46 E.
Boerne, TX 78006
877-680-1680

© 2021 Timberlyne, All Rights Reserved.
THIS PLAN AND DESIGNS CONTAINED HERIN ARE THE PROPERTY OF TIMBERLYNE GROUP™ AND MAY NOT BE REPRODUCED WITHOUT PRIOR WRITTEN CONSENT FROM TIMBERLYNE GROUP™.

CUSTOMER INFORMATION:

DAN MCENTEE

PROJECT INFORMATION:

MCENTEE GROUP HOME

200&202 SUNDANCE CT
STEAMBOAT SPRINGS,CO 80487

NUMBER:	MGR0524-1
CATEGORY:	Residential
STYLE:	SINGLE SLOPE
OTHER:	--
OTHER:	--
PM:	CM

DRAWING INFORMATION:

DRAWN BY:	BL
DATE:	10/16/24
STATUS:	STRUCTURAL
OTHER:	--
OTHER:	--

SHEET NOTES

1. BASE OF MAIN FRAME POST CUT TO FIT IN FIELD BY GENERAL CONTRACTOR ACCORDING TO SPECS ON CUT LISTS. CUT BOTTOM OF POST ONLY.

SHEET

S500

RUSHMORE

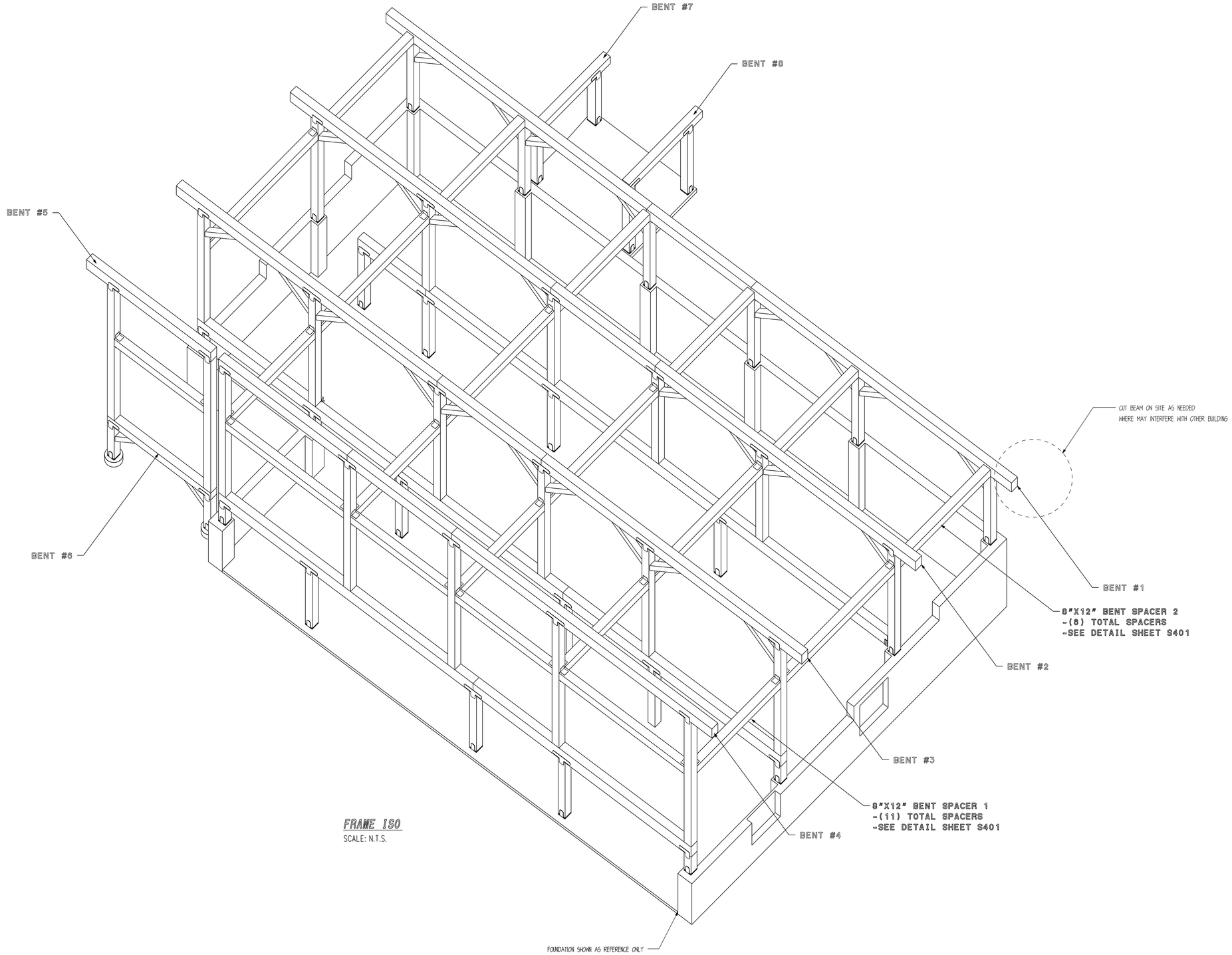

FRAME ISO

SCALE: N.T.S.

COLORADO LICENSED
JOHN B. UZMAN
32718
PROFESSIONAL ENGINEER

SealPact 2024-10-18 09:57:53 EST
Click seal or scan QR Code for verification; otherwise not valid.

TIMBERLYNE

www.timberlyne.com

Nebraska: 116 West 1st Street
Wayne, NE 68787
888-489-1680
Texas: 613 Hwy 46 E.
Boerne, TX 78006
877-680-1680

© 2021 Timberlyne, All Rights Reserved.
THIS PLAN AND DESIGNS CONTAINED HERIN ARE THE PROPERTY OF TIMBERLYNE GROUP™ AND MAY NOT BE REPRODUCED WITHOUT PRIOR WRITTEN CONSENT FROM TIMBERLYNE GROUP™.

CUSTOMER INFORMATION:

DAN
MCENTEE

PROJECT INFORMATION:

MCENTEE GROUP
HOME

200&202 SUNDANCE CT
STEAMBOAT SPRINGS,CO 80487

NUMBER:	MGR0524-1
CATEGORY:	Residential
STYLE:	SINGLE SLOPE
OTHER:	--
OTHER:	--
PM:	CM

DRAWING INFORMATION:

DRAWN BY:	BL
DATE:	10/16/24
STATUS:	STRUCTURAL
OTHER:	--
OTHER:	--

SHEET NOTES

1. BASE OF MAIN FRAME POST CUT TO FIT IN FIELD BY GENERAL CONTRACTOR ACCORDING TO SPECS ON CUT LISTS. CUT BOTTOM OF POST ONLY.

SHEET

S501

RUSHMORE

SHEAR WALL SCHEDULE

MARK	WALL SHEATHING	NAIL SIZE	EDGE NAIL SPACING	FIELD NAIL SPACING	SPECIAL NOTES
1	1/2" OSB SHEATHING	8D NAILS	6" O.C.	12" O.C.	--
2	1/2" OSB SHEATHING	8D NAILS	4" O.C.	12" O.C.	--
3	1/2" OSB SHEATHING	8D NAILS	3" O.C.	12" O.C.	--

SHEARWALL NOTES:

1. VERT. 2X6 (NOM) STUDS @ 16" O.C. MAX.
2. ALL FIELD NAILING TO BE 12" O.C. AND ALL UNSUPPORTED PANEL EDGES ARE TO BE BLOCKED.
3. ALL SHEAR WALLS HAVE 2x6 TREATED SILL PLATE.
4. ALL SILL PLATE ANCHORED TO FOUNDATION W/ 1/2"X6" SIMPSON TITEN HD ANCHORS.
5. ANCHOR BOLTS SHALL BE PLACED @ ALL JAMBS, CORNERS, AND INTERSECTIONS.
6. FIELD VERIFY ALL DOOR AND WINDOW OPENINGS ON SITE PRIOR TO FRAMING OPENINGS.

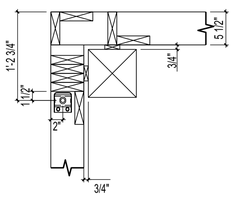

HDU LOCATION DETAILS

SCALE: 1" = 1'

HOLDOWN DESCRIPTIONS
-REFER TO MANUF. SPECS FOR FURTHER INFORMATION ABOUT PRODUCT AND ATTACHMENTS -USE SIMPSON SET EPOXY OR EQUIV.
SIMPSON HDU8-SDS2.5 ATTACH INTO MIN. 3.5" FRAMING W/ 20 SDS 1/4"X2-1/2" SCREWS. ANCHOR INTO FOUNDATION W/ 7/8" DIA. THREADED ROD (EPOXY SET) MIN. 12" EMBEDMENT.

** HOLDOWN UPLIFT 5800#. MAX SHEAR PARALLEL TO WALL: 400PLF**

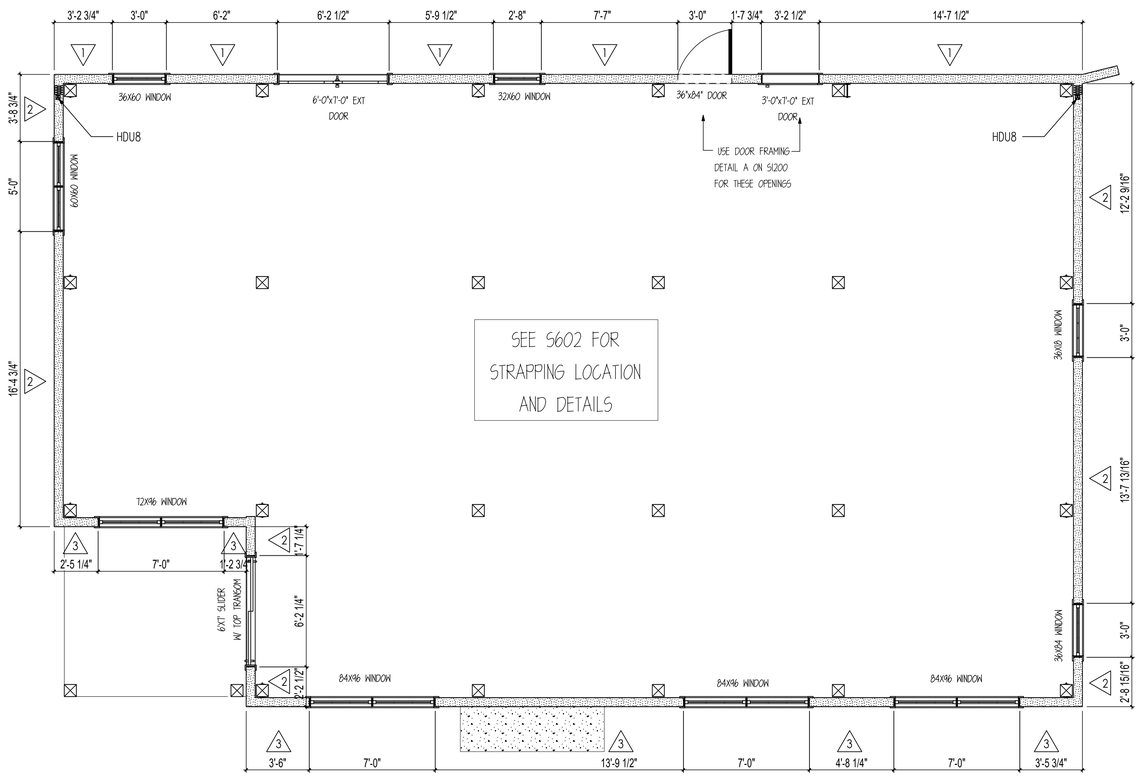

MAIN FLOOR SHEAR WALL LAYOUT

SCALE: 1/4" = 1'

NOTE: CONTRACTOR TO FIELD VERIFY OPENING SIZES PRIOR TO FRAMING.

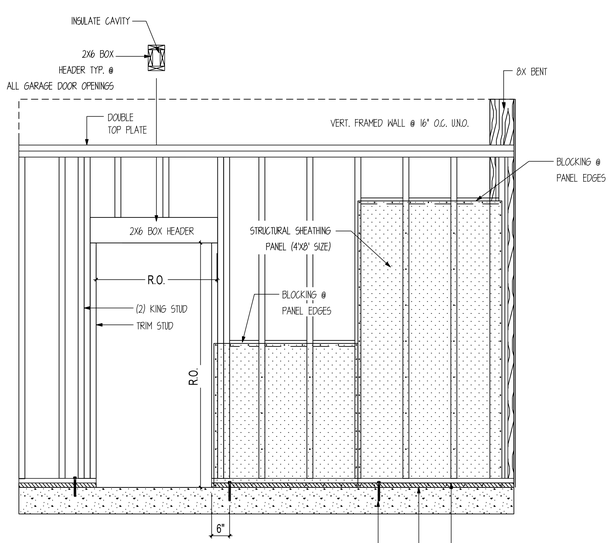

SHEARWALL PANEL ATTACHMENT DETAIL

SCALE: 1/2" = 1'

NOTE: SEE SHEARWALL SCHEDULE FOR ALL PANEL ATTACHMENTS AT PANEL EDGES AND IN THE FIELD OF THE PANEL.

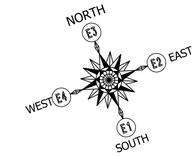

COLORADO LICENSED
ERIN E. HAMM
32718
PROFESSIONAL ENGINEER

SealPact 2024-10-18 09:57:53 EST
Click seal or scan QR Code for verification; otherwise not valid.

TIMBERLYNE

www.timberlyne.com

Nebraska: 116 West 1st Street
Wayne, NE 68787
888-489-1680
Texas: 613 Hwy 46 E.
Boerne, TX 78006
877-680-1680

© 2021 Timberlyne, All Rights Reserved.
THIS PLAN AND DESIGNS CONTAINED HERIN ARE THE PROPERTY OF TIMBERLYNE GROUP™ AND MAY NOT BE REPRODUCED WITHOUT PRIOR WRITTEN CONSENT FROM TIMBERLYNE GROUP™.

CUSTOMER INFORMATION:

DAN MCENTEE

PROJECT INFORMATION:

MCENTEE GROUP HOME

200&202 SUNDANCE CT
STEAMBOAT SPRINGS,CO 80487

NUMBER:	MGR0524-1
CATEGORY:	Residential
STYLE:	SINGLE SLOPE
OTHER:	--
OTHER:	--
PM:	CM

DRAWING INFORMATION:

DRAWN BY:	BL
DATE:	10/16/24
STATUS:	STRUCTURAL
OTHER:	--
OTHER:	--

SHEET NOTES

SHEET

S600

RUSHMORE

SHEAR WALL SCHEDULE

MARK	WALL SHEATHING	NAIL SIZE	EDGE NAIL SPACING	FIELD NAIL SPACING	SPECIAL NOTES
1	1/2" OSB SHEATHING	8D NAILS	6" O.C.	12" O.C.	--
2	1/2" OSB SHEATHING	8D NAILS	4" O.C.	12" O.C.	--
3	1/2" OSB SHEATHING	8D NAILS	3" O.C.	12" O.C.	--

SHEARWALL NOTES:

1. VERT. 2X6 (NOM) STUDS @ 16" O.C. MAX.
2. ALL FIELD NAILING TO BE 12" O.C. AND ALL UNSUPPORTED PANEL EDGES ARE TO BE BLOCKED.
3. ALL SHEAR WALLS HAVE 2x6 TREATED SILL PLATE.
4. ALL SILL PLATE ANCHORED TO FOUNDATION W/ 1/2"X6" SIMPSON TITEN HD ANCHORS.
5. ANCHOR BOLTS SHALL BE PLACED @ ALL JAMBS, CORNERS, AND INTERSECTIONS.
6. FIELD VERIFY ALL DOOR AND WINDOW OPENINGS ON SITE PRIOR TO FRAMING OPENINGS.

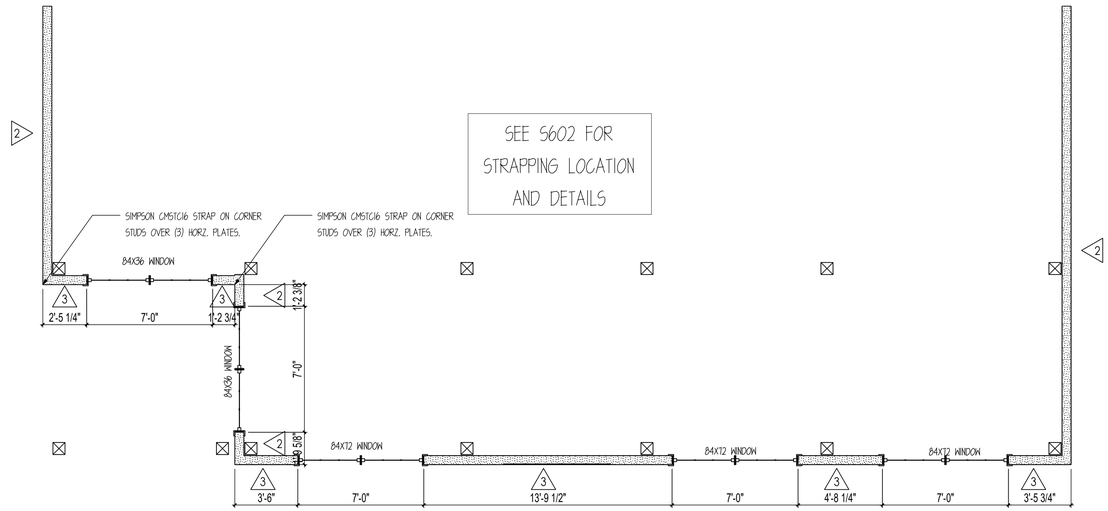

UPPER SHEAR WALL LAYOUT

SCALE: 1/4" = 1'

NOTE: CONTRACTOR TO FIELD VERIFY OPENING SIZES PRIOR TO FRAMING.

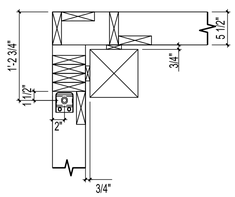

HDU LOCATION DETAILS

SCALE: 1" = 1'

HOLDOWN DESCRIPTIONS	
-REFER TO MANUF. SPECS FOR FURTHER INFORMATION ABOUT PRODUCT AND ATTACHMENTS -USE SIMPSON SET EPOXY OR EQUIV.	
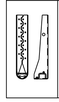	SIMPSON HDU8-SDS2.5 ATTACH INTO MIN. 3.5" FRAMING W/ 20 SDS 1/4"X2-1/2" SCREWS. ANCHOR INTO FOUNDATION W/ 7/8" DIA. THREADED ROD (EPOXY SET) MIN. 12" EMBEDMENT.

** HOLDOWN UPLIFT 5800#. MAX SHEAR PARALLEL TO WALL: 400PLF**

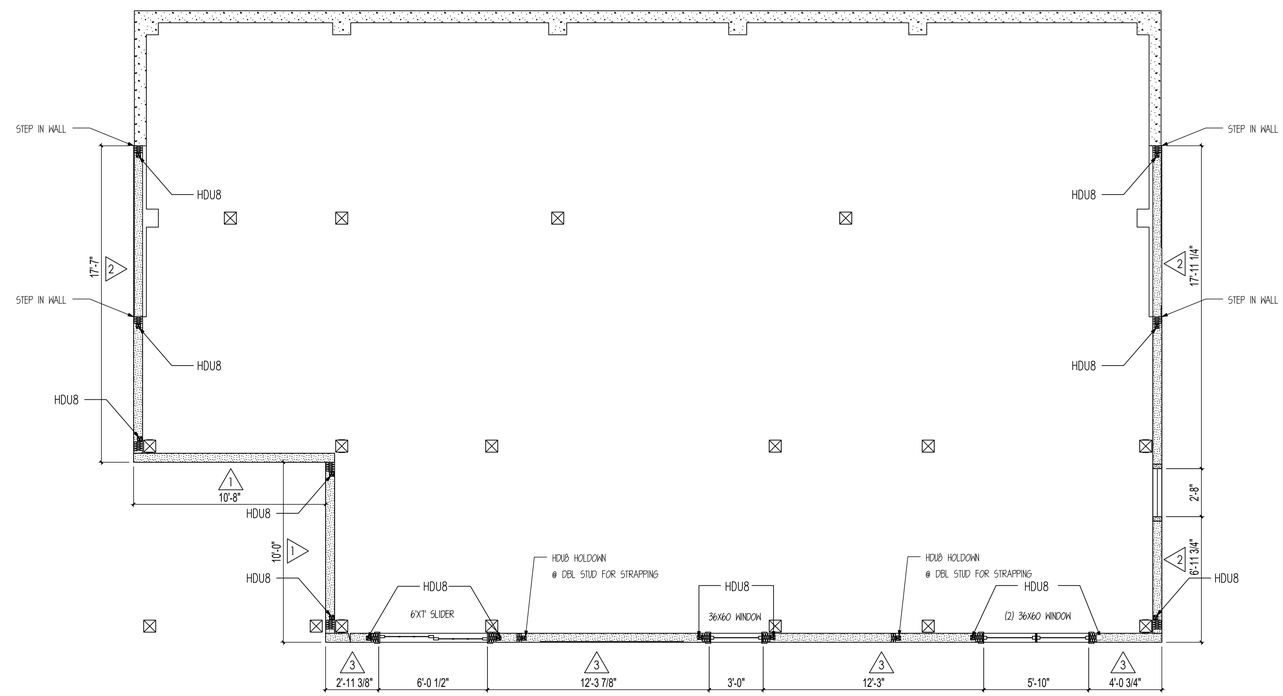

LOWER SHEAR WALL LAYOUT

SCALE: 1/4" = 1'

NOTE: CONTRACTOR TO FIELD VERIFY OPENING SIZES PRIOR TO FRAMING.

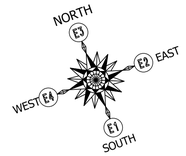

SealPact 2024-10-18 09:57:53 EST
Click seal or scan QR Code for verification; otherwise not valid.

TIMBERLYNE

www.timberlyne.com

Nebraska: 116 West 1st Street
Wayne, NE 68787
888-489-1680
Texas: 613 Hwy 46 E.
Boerne, TX 78006
877-680-1680

© 2021 Timberlyne, All Rights Reserved.
THIS PLAN AND DESIGNS CONTAINED HERIN ARE THE PROPERTY OF TIMBERLYNE GROUP™ AND MAY NOT BE REPRODUCED WITHOUT PRIOR WRITTEN CONSENT FROM TIMBERLYNE GROUP™.

CUSTOMER INFORMATION:

DAN MCENTEE

PROJECT INFORMATION:

MCENTEE GROUP HOME

200&202 SUNDANCE CT
STEAMBOAT SPRINGS,CO 80487

NUMBER:	MGR0524-1
CATEGORY:	Residential
STYLE:	SINGLE SLOPE
OTHER:	--
OTHER:	--
PM:	CM

DRAWING INFORMATION:

DRAWN BY:	BL
DATE:	10/16/24
STATUS:	STRUCTURAL
OTHER:	--
OTHER:	--

SHEET NOTES

SHEET

S601

STRAPPING DESCRIPTIONS
-SIMPSON CMSTC16 STRAP -25" MIN. END LENGTH -ATTACH INTO DBL STUD

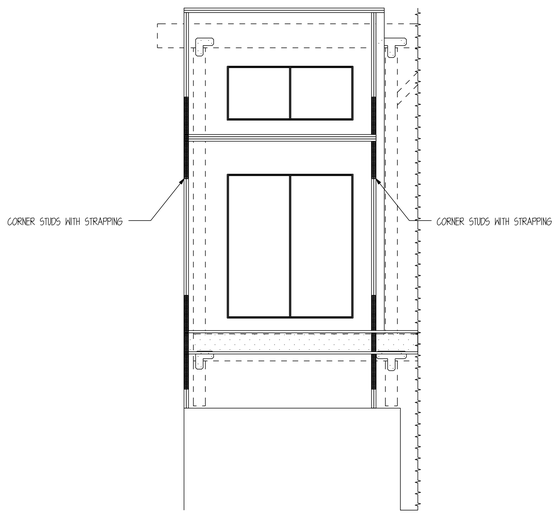

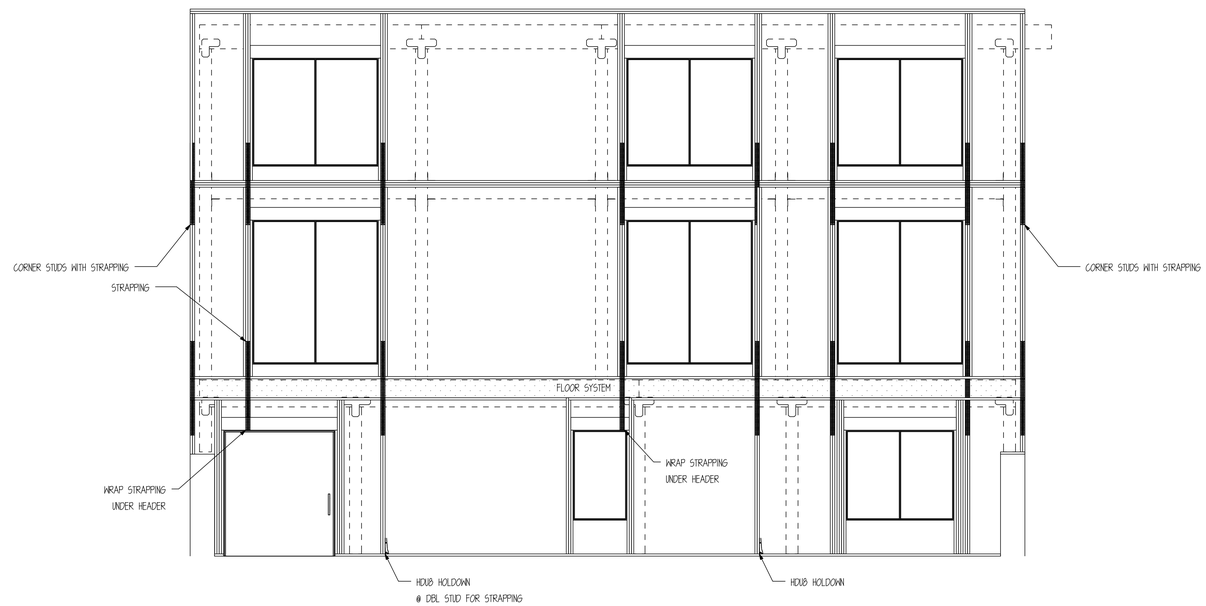

WALL FRAMING FOR STRAP LAYOUT

SCALE: 1/4" = 1'

NOTE: CONTRACTOR TO FIELD VERIFY OPENING SIZES PRIOR TO FRAMING.

COLORADO LICENSED
ADAM B. LEMMON
32718
PROFESSIONAL ENGINEER

SealPact 2024-10-18 09:57:53 EST
Click seal or scan QR Code for verification; otherwise not valid.

TIMBERLYNE

www.timberlyne.com

Nebraska: 116 West 1st Street
Wayne, NE 68787
888-489-1680
Texas: 613 Hwy 46 E.
Boerne, TX 78006
877-680-1680

© 2021 Timberlyne, All Rights Reserved.
THIS PLAN AND DESIGNS CONTAINED HERIN ARE THE PROPERTY OF TIMBERLYNE GROUP™ AND MAY NOT BE REPRODUCED WITHOUT PRIOR WRITTEN CONSENT FROM TIMBERLYNE GROUP™.

CUSTOMER INFORMATION:

DAN MCENTEE

PROJECT INFORMATION:

MCENTEE GROUP HOME

200&202 SUNDANCE CT
STEAMBOAT SPRINGS,CO 80487

NUMBER:	MGR0524-1
CATEGORY:	Residential
STYLE:	SINGLE SLOPE
OTHER:	--
OTHER:	--
PM:	CM

DRAWING INFORMATION:

DRAWN BY:	BL
DATE:	10/16/24
STATUS:	STRUCTURAL
OTHER:	--
OTHER:	--

SHEET NOTES

SHEET

S601

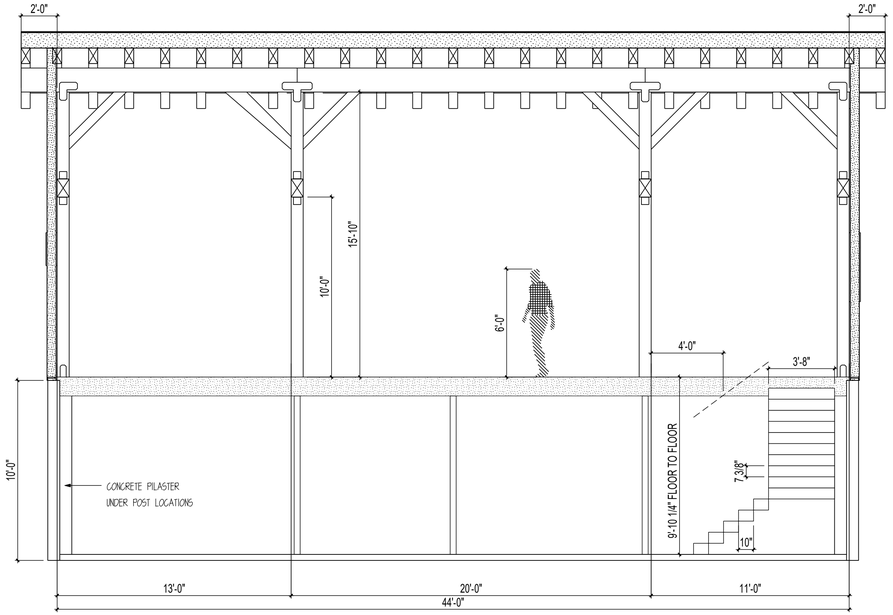

STEAMBOAT STAIR SECTION

SCALE: 1/4" = 1'

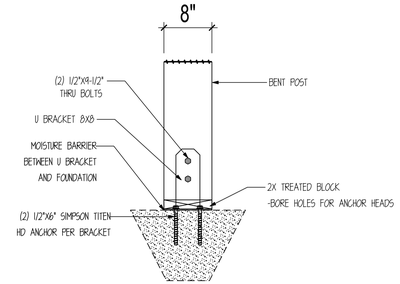

2 POST CONNECTION DETAIL

SCALE : 1" =1'-0"

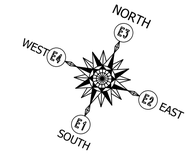

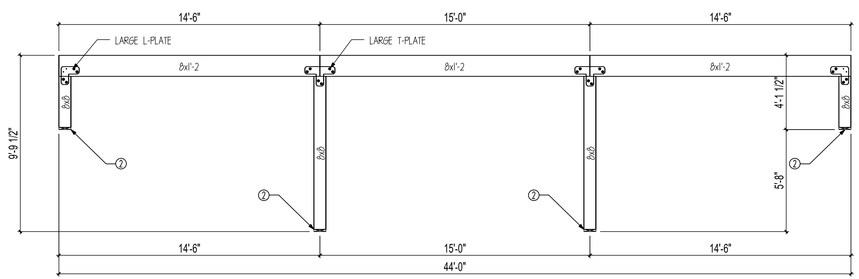

GIRDER 4

SCALE: 1/4" = 1'

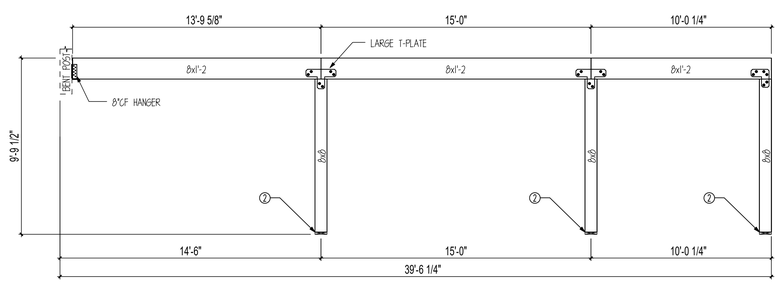

GIRDER 5

SCALE: 1/4" = 1'

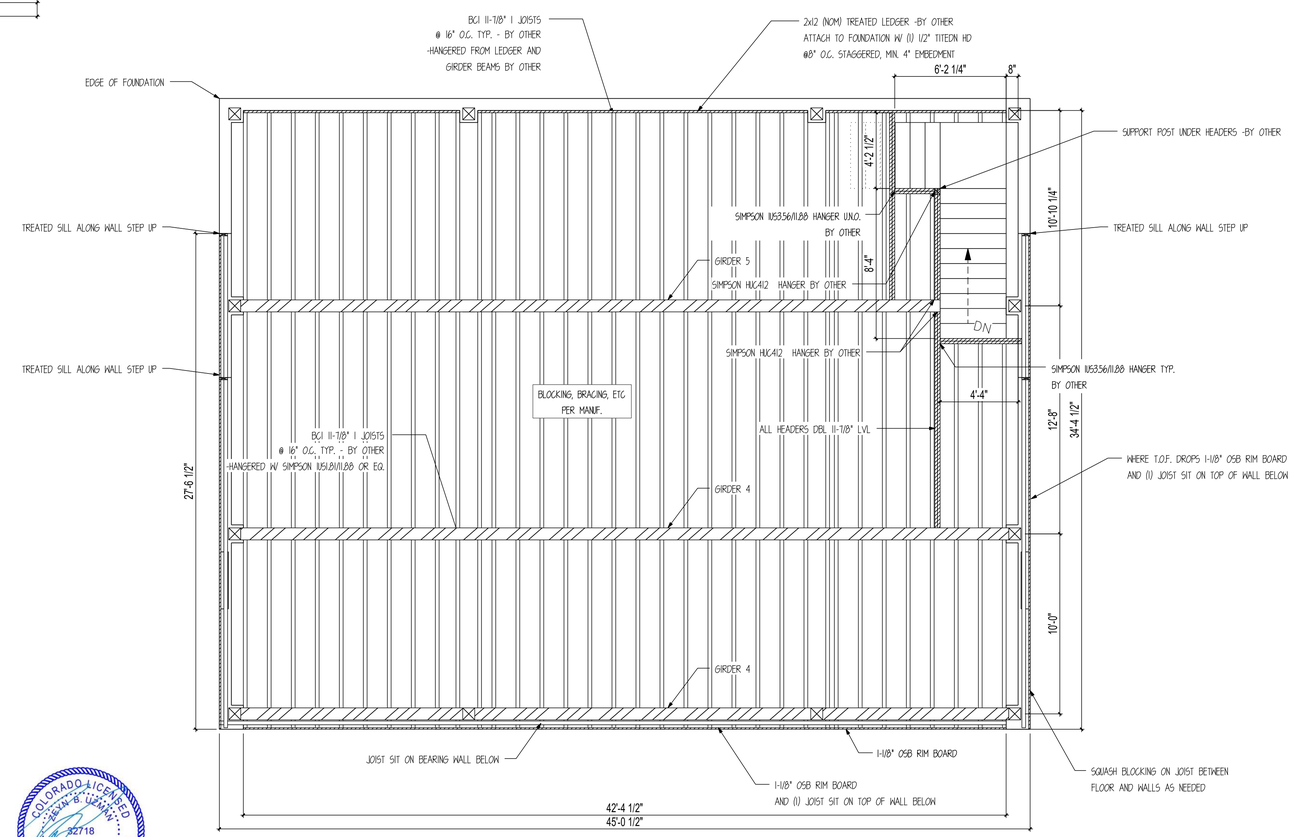

MAIN FRAMING PLAN

SCALE: 1/4" = 1'

COLORADO LICENSED
BRIAN B. LUCAS
32718
PROFESSIONAL ENGINEER

SealPact 2024-10-18 09:57:53 EST
Click seal or scan QR Code for
verification; otherwise not valid.

TIMBERLYNE

www.timberlyne.com

Nebraska: 116 West 1st Street
Wayne, NE 68787
888-489-1680
Texas: 613 Hwy 46 E.
Boerne, TX 78006
877-680-1680

© 2021 Timberlyne, All Rights Reserved.
THIS PLAN AND DESIGNS CONTAINED HERIN ARE THE PROPERTY OF TIMBERLYNE GROUP™ AND MAY NOT BE REPRODUCED WITHOUT PRIOR WRITTEN CONSENT FROM TIMBERLYNE GROUP™.

CUSTOMER INFORMATION:

DAN
MCENTEE

PROJECT INFORMATION:

MCENTEE GROUP
HOME

200&202 SUNDANCE CT
STEAMBOAT SPRINGS,CO 80487

NUMBER:	MGR0524-1
CATEGORY:	Residential
STYLE:	SINGLE SLOPE
OTHER:	--
OTHER:	--
PM:	CM

DRAWING INFORMATION:

DRAWN BY:	BL
DATE:	10/16/24
STATUS:	STRUCTURAL
OTHER:	--
OTHER:	--

SHEET NOTES

1. INSTALL BLOCKING BETWEEN JOISTS @ ALL ENDS.
2. ALL HANGERS SUPPLIED BY OTHER
3. CUT JOISTS TO SIZE ON SITE

SHEET

S700

STEAMBOAT

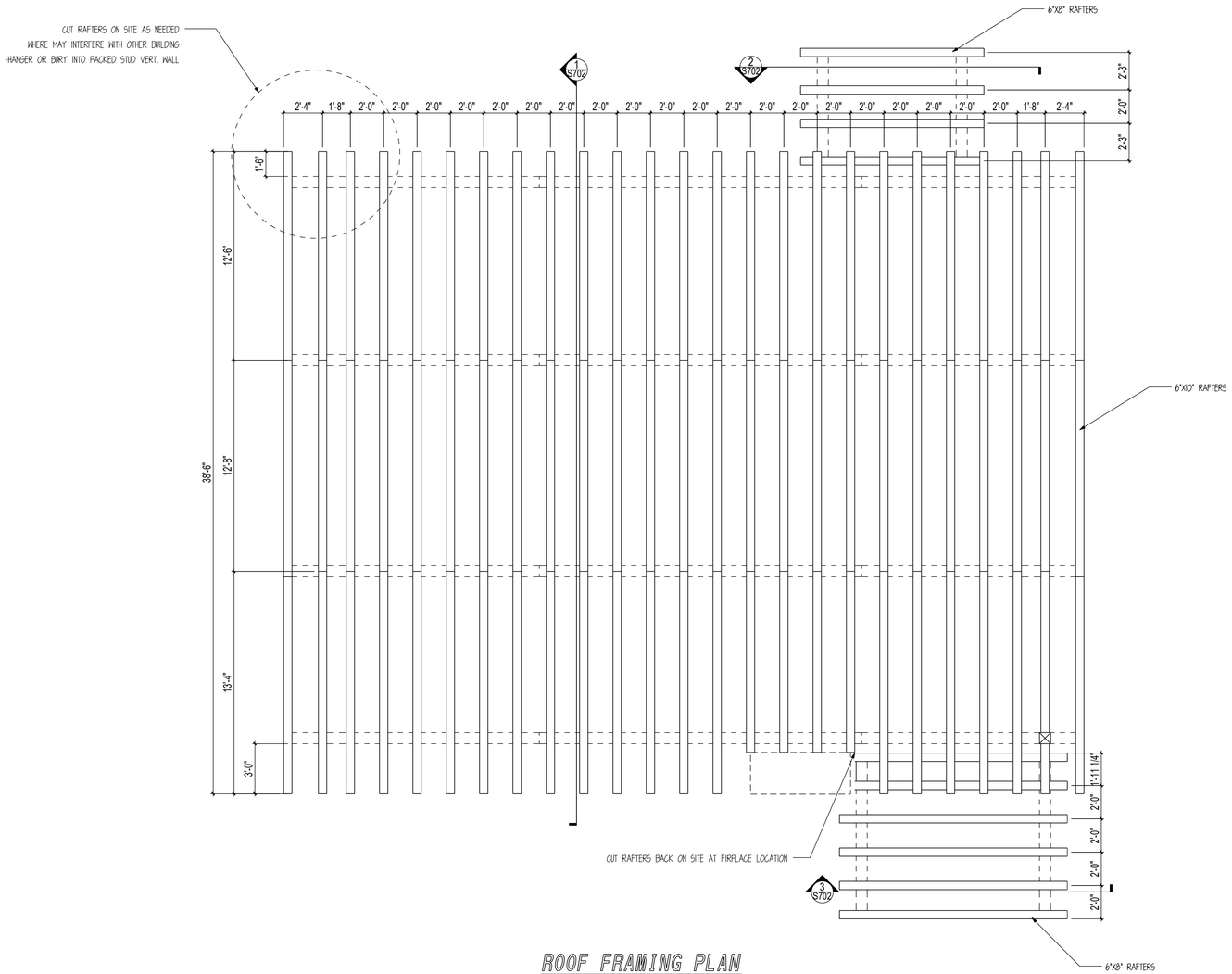

ROOF FRAMING PLAN

SCALE: 1/4" = 1'

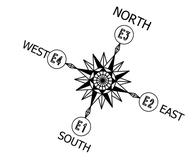

SealPact 2024-10-18 09:57:53 EST
Click seal or scan QR Code for verification; otherwise not valid.

TIMBERLYNE

www.timberlyne.com

Nebraska: 116 West 1st Street
Wayne, NE 68787
888-489-1680
Texas: 613 Hwy 46 E.
Boerne, TX 78006
877-680-1680

© 2021 Timberlyne, All Rights Reserved.
THIS PLAN AND DESIGNS CONTAINED HERIN ARE THE PROPERTY OF TIMBERLYNE GROUP™ AND MAY NOT BE REPRODUCED WITHOUT PRIOR WRITTEN CONSENT FROM TIMBERLYNE GROUP™.

CUSTOMER INFORMATION:

DAN MCENTEE

PROJECT INFORMATION:

MCENTEE GROUP HOME

200&202 SUNDANCE CT
STEAMBOAT SPRINGS,CO 80487

NUMBER:	MGR0524-1
CATEGORY:	Residential
STYLE:	SINGLE SLOPE
OTHER:	--
OTHER:	--
PM:	CM

DRAWING INFORMATION:

DRAWN BY:	BL
DATE:	10/16/24
STATUS:	STRUCTURAL
OTHER:	--
OTHER:	--

SHEET NOTES

1. INSTALL BLOCKING BETWEEN JOISTS @ ALL ENDS.
2. ALL HANGERS SUPPLIED BY OTHER
3. CUT JOISTS TO SIZE ON SITE

SHEET

S701

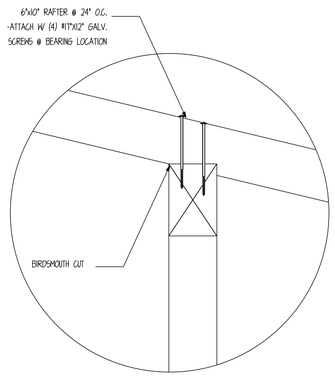

M RAFTER ATTACHMENT DETAIL
SCALE: 1" = 1'

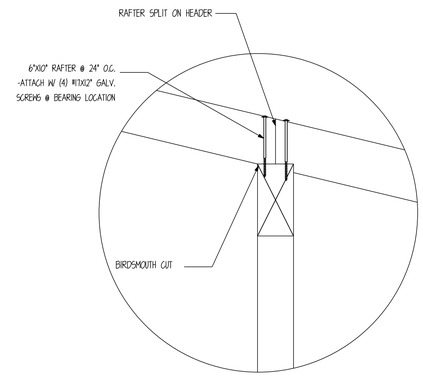

N RAFTER SPLIT ATTACHMENT DETAIL
SCALE: 1" = 1'

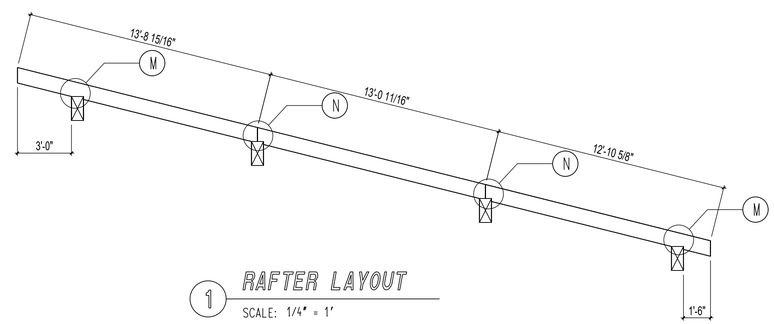

1 RAFTER LAYOUT
SCALE: 1/4" = 1'

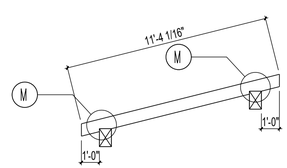

2 RAFTER LAYOUT
SCALE: 1/4" = 1'

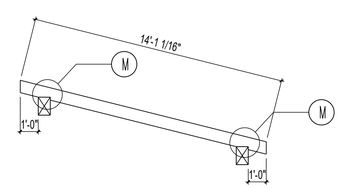

3 RAFTER LAYOUT
SCALE: 1/4" = 1'

COLORADO LICENSED
JEFF B. UZZELL
32718
PROFESSIONAL ENGINEER

SealPact 2024-10-18 09:57:53 EST
Click seal or scan QR Code for verification; otherwise not valid.

TIMBERLYNE

www.timberlyne.com

Nebraska: 116 West 1st Street
Wayne, NE 68787
888-489-1680
Texas: 613 Hwy 46 E.
Boerne, TX 78006
877-680-1680

© 2021 Timberlyne, All Rights Reserved.
THIS PLAN AND DESIGNS CONTAINED HERIN ARE THE PROPERTY OF TIMBERLYNE GROUP™ AND MAY NOT BE REPRODUCED WITHOUT PRIOR WRITTEN CONSENT FROM TIMBERLYNE GROUP™.

CUSTOMER INFORMATION:

DAN MCENTEE

PROJECT INFORMATION:

MCENTEE GROUP HOME

200&202 SUNDANCE CT
STEAMBOAT SPRINGS,CO 80487

NUMBER:	MGR0524-1
CATEGORY:	Residential
STYLE:	SINGLE SLOPE
OTHER:	--
OTHER:	--
PM:	CM

DRAWING INFORMATION:

DRAWN BY:	BL
DATE:	10/16/24
STATUS:	STRUCTURAL
OTHER:	--
OTHER:	--

SHEET NOTES

SHEET

S702

NOTE: EXTERIOR FLASHING TO BE INSTALLED AT ALL CONNECTIONS BETWEEN ROOFS, WALLS, AND PROJECTIONS OR PENETRATIONS AS REQUIRED BY GOOD CONSTRUCTION PRACTICES. FLASHING MATERIALS AND DETAILS TO BE PROVIDED BY CUSTOMER OR GENERAL CONTRACTOR.

NOTE: ALL OSB SHEATHING TO BE APA RATED SHEATHING W/ SPAN RATING OF 32/16 INSTALLED PERP. TO SUPPORTS

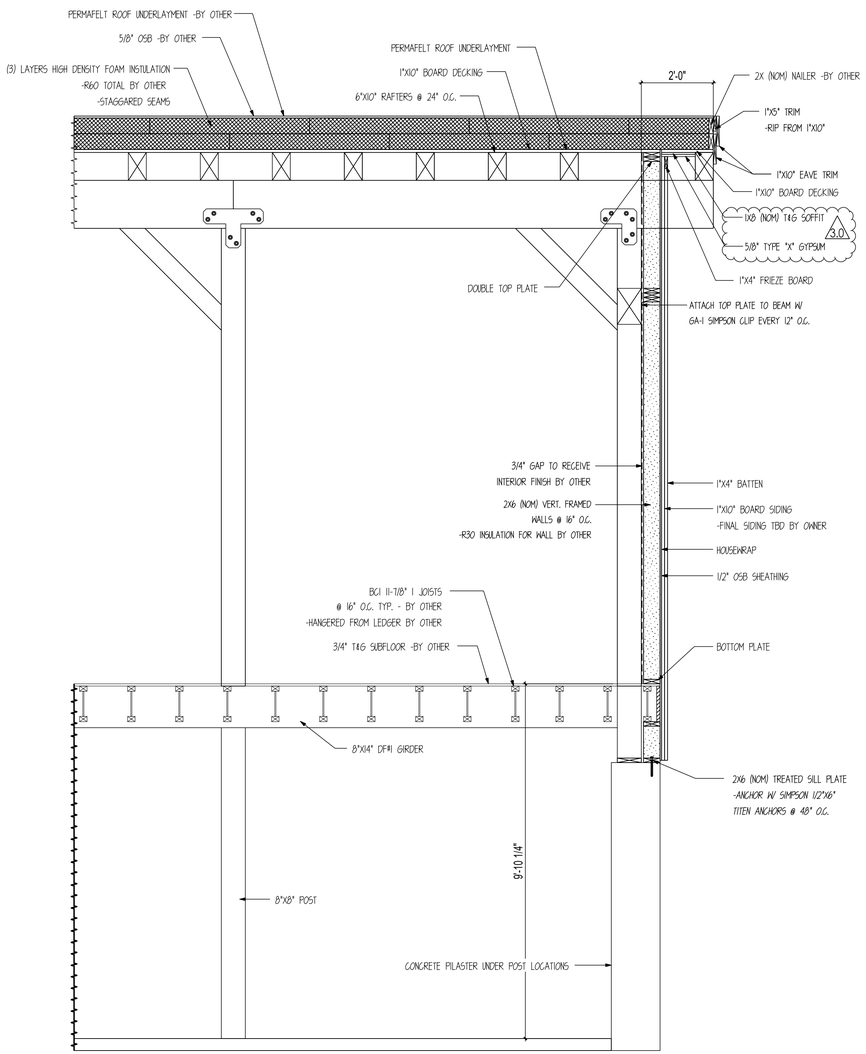

F **HOME EXTERIOR WALL SECTION**

SCALE : 1/2" = 1'

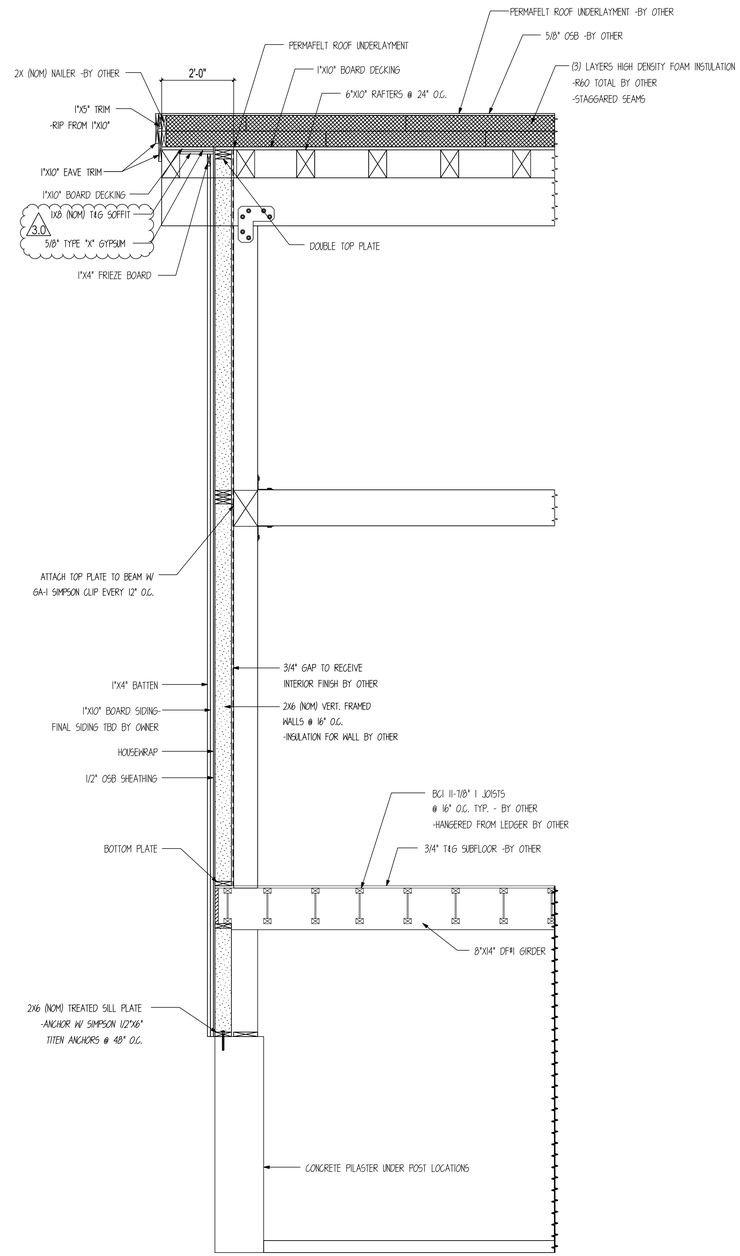

G **HOME EXTERIOR WALL SECTION**

SCALE : 1/2" = 1'

COLORADO LICENSED
JOHN B. UZMANN
32718
PROFESSIONAL ENGINEER

SealPact 2024-10-18 09:57:53 EST
Click seal or scan QR Code for verification; otherwise not valid.

TIMBERLYNE

www.timberlyne.com

Nebraska: 116 West 1st Street
Wayne, NE 68787
888-489-1680
Texas: 613 Hwy 46 E.
Boerne, TX 78006
877-680-1680

© 2021 Timberlyne, All Rights Reserved.
THIS PLAN AND DESIGNS CONTAINED HERIN ARE THE PROPERTY OF TIMBERLYNE GROUP™ AND MAY NOT BE REPRODUCED WITHOUT PRIOR WRITTEN CONSENT FROM TIMBERLYNE GROUP™.

CUSTOMER INFORMATION:

DAN MCENTEE

PROJECT INFORMATION:

MCENTEE GROUP HOME

200&202 SUNDANCE CT
STEAMBOAT SPRINGS,CO 80487

NUMBER:	MGR0524-1
CATEGORY:	Residential
STYLE:	SINGLE SLOPE
OTHER:	--
OTHER:	--
PM:	CM

DRAWING INFORMATION:

DRAWN BY:	BL
DATE:	10/16/24
STATUS:	STRUCTURAL
OTHER:	--
OTHER:	--

SHEET NOTES

SHEET

S800

NOTE: EXTERIOR FLASHING TO BE INSTALLED AT ALL CONNECTIONS BETWEEN ROOFS, WALLS, AND PROJECTIONS OR PENETRATIONS AS REQUIRED BY GOOD CONSTRUCTION PRACTICES. FLASHING MATERIALS AND DETAILS TO BE PROVIDED BY CUSTOMER OR GENERAL CONTRACTOR.

NOTE: ALL OSB SHEATHING TO BE APA RATED SHEATHING W/ SPAN RATING OF 32/16 INSTALLED PERP. TO SUPPORTS

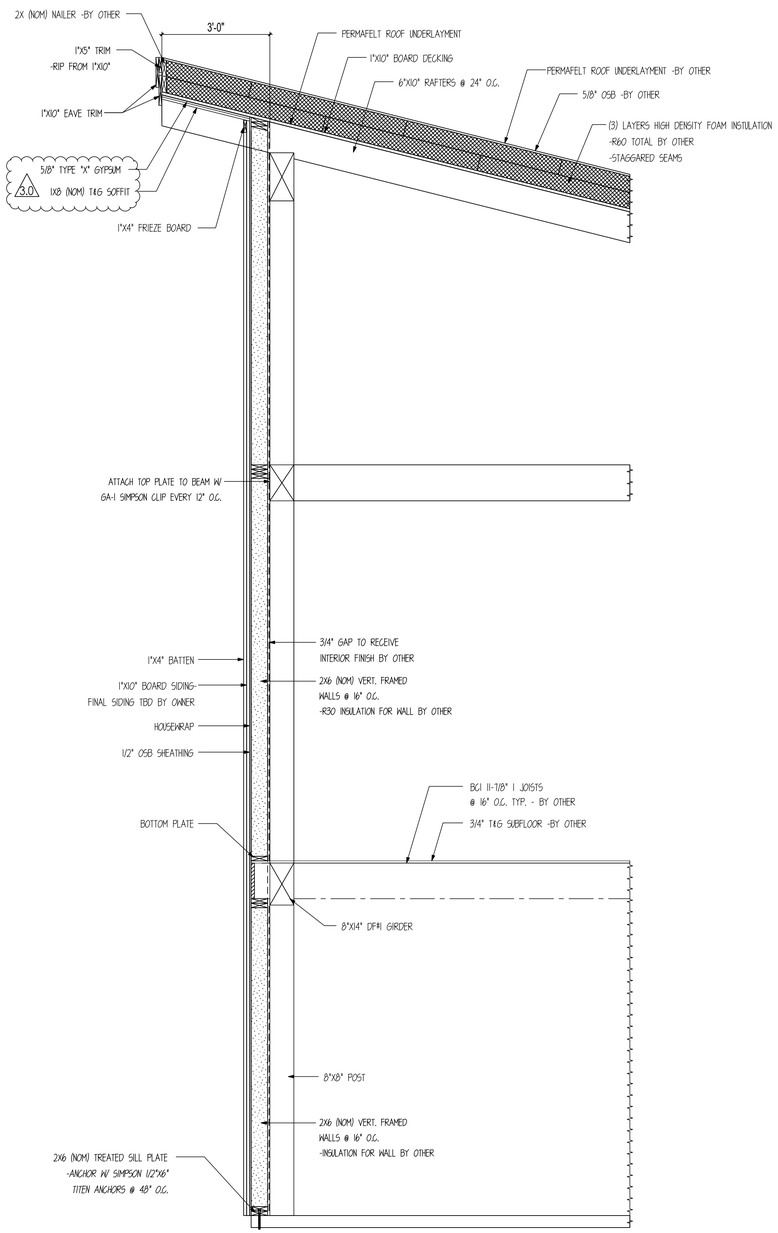

H **HOME EXTERIOR WALL SECTION**
SCALE : 1/2" = 1'

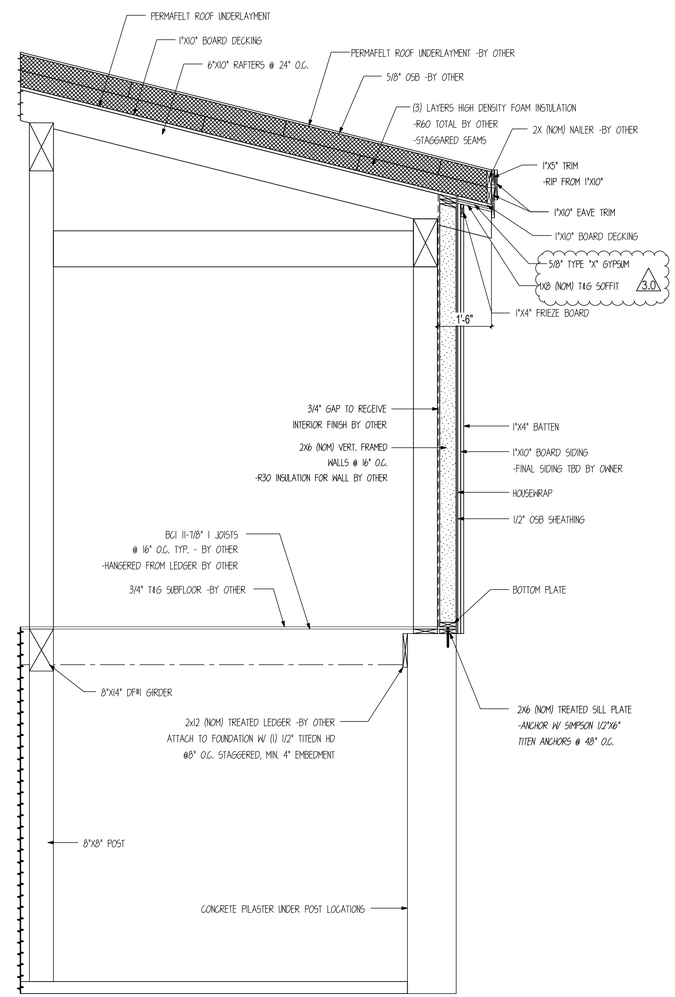

I **HOME EXTERIOR WALL SECTION**
SCALE : 1/2" = 1'

COLORADO LICENSED
SCOTT B. UMMEL
32718
PROFESSIONAL ENGINEER

SealPact 2024-10-18 09:57:53 EST
Click seal or scan QR Code for verification; otherwise not valid.

TIMBERLYNE

www.timberlyne.com

Nebraska: 116 West 1st Street
Wayne, NE 68787
888-489-1680
Texas: 613 Hwy 46 E.
Boerne, TX 78006
877-680-1680

© 2021 Timberlyne, All Rights Reserved.
THIS PLAN AND DESIGNS CONTAINED HERIN ARE THE PROPERTY OF TIMBERLYNE GROUP™ AND MAY NOT BE REPRODUCED WITHOUT PRIOR WRITTEN CONSENT FROM TIMBERLYNE GROUP™.

CUSTOMER INFORMATION:

DAN MCENTEE

PROJECT INFORMATION:

MCENTEE GROUP HOME

200&202 SUNDANCE CT
STEAMBOAT SPRINGS,CO 80487

NUMBER:	MGR0524-1
CATEGORY:	Residential
STYLE:	SINGLE SLOPE
OTHER:	--
OTHER:	--
PM:	CM

DRAWING INFORMATION:

DRAWN BY:	BL
DATE:	10/16/24
STATUS:	STRUCTURAL
OTHER:	--
OTHER:	--

SHEET NOTES

SHEET

S801

STEAMBOAT

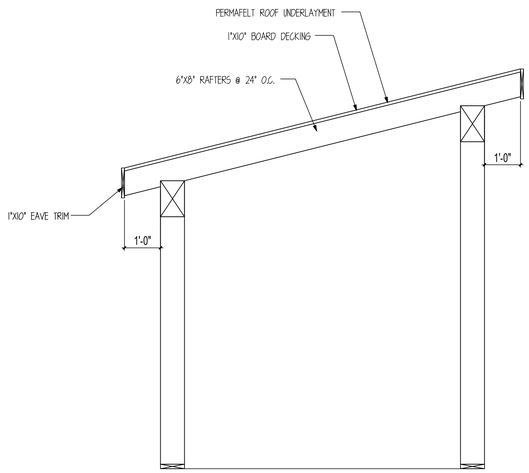

J **COVERED ENTRY SECTION**
SCALE : 1/2" = 1'

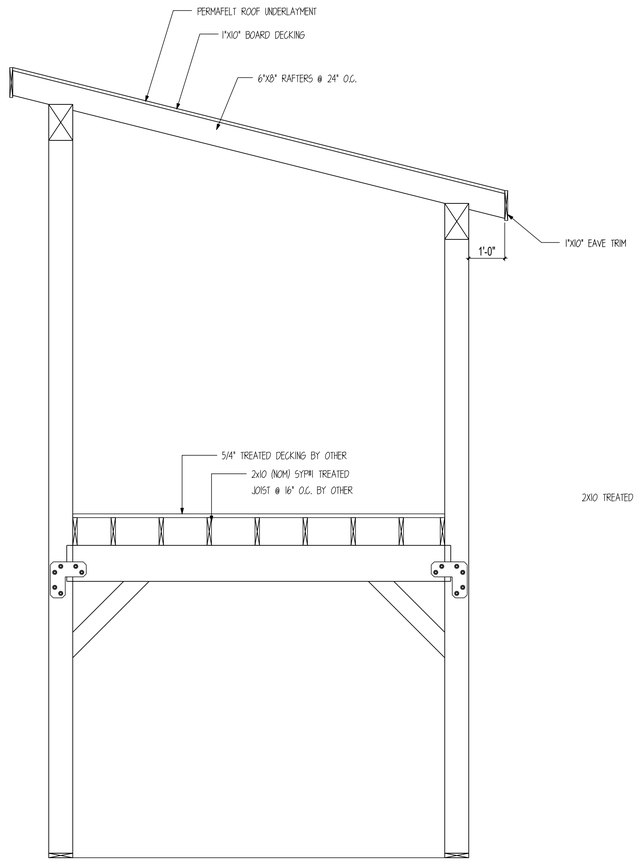

K **COVERED DECK SECTION**
SCALE : 1/2" = 1'

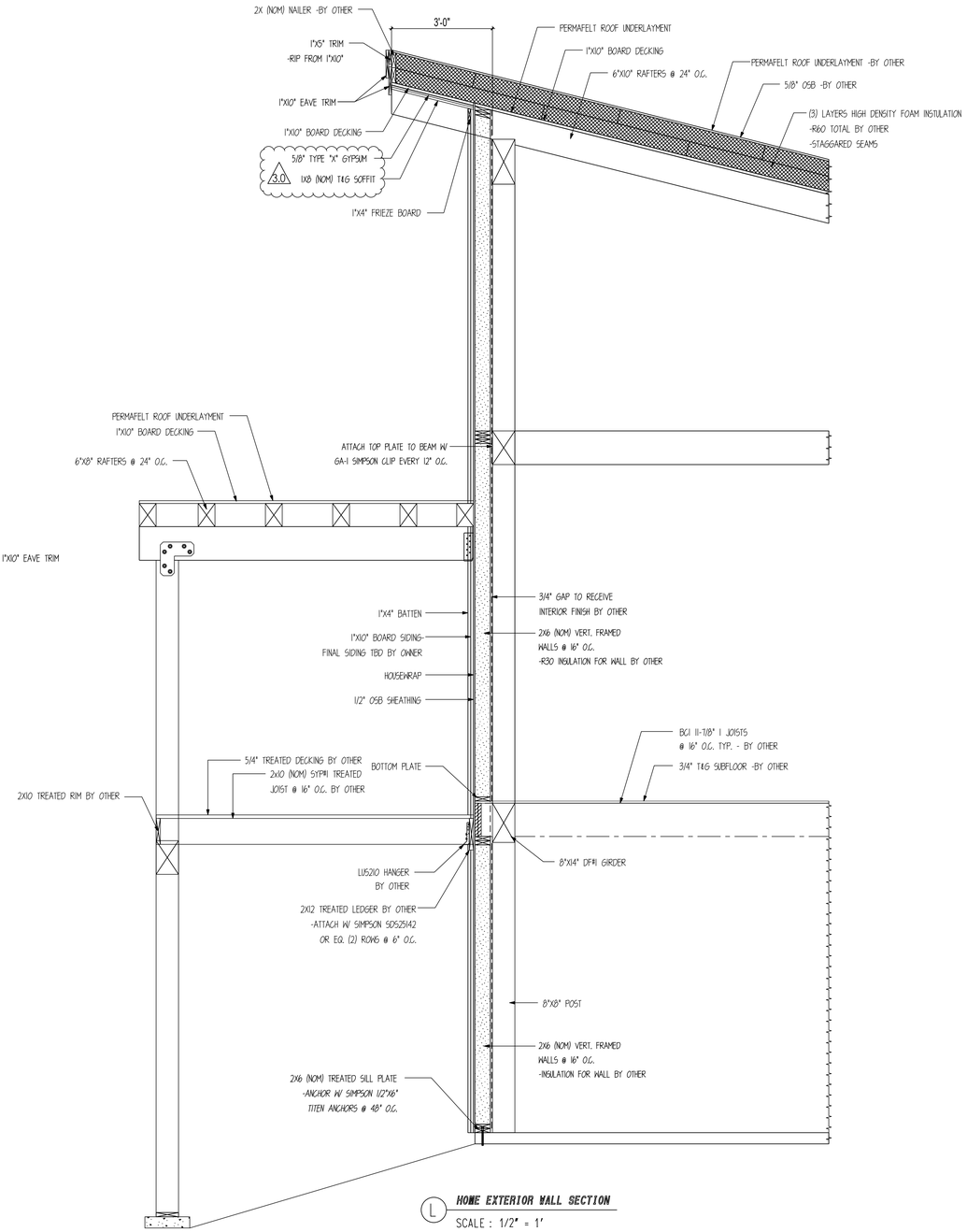

L **HOME EXTERIOR WALL SECTION**
SCALE : 1/2" = 1'

COLORADO LICENSED
BRYAN B. LEMAY
32718
PROFESSIONAL ENGINEER

SealPact 2024-10-18 09:57:53 EST
Click seal or scan QR Code for verification; otherwise not valid.

TIMBERLYNE

www.timberlyne.com

Nebraska: 116 West 1st Street
Wayne, NE 68787
888-489-1680
Texas: 613 Hwy 46 E.
Boerne, TX 78006
877-680-1680

© 2021 Timberlyne, All Rights Reserved.
THIS PLAN AND DESIGNS CONTAINED HERIN ARE THE PROPERTY OF TIMBERLYNE GROUP™ AND MAY NOT BE REPRODUCED WITHOUT PRIOR WRITTEN CONSENT FROM TIMBERLYNE GROUP™.

CUSTOMER INFORMATION:

DAN
MCENTEE

PROJECT INFORMATION:

MCENTEE GROUP
HOME

200&202 SUNDANCE CT
STEAMBOAT SPRINGS,CO 80487

NUMBER:	MGR0524-1
CATEGORY:	Residential
STYLE:	SINGLE SLOPE
OTHER:	--
OTHER:	--
PM:	CM

DRAWING INFORMATION:

DRAWN BY:	BL
DATE:	10/16/24
STATUS:	STRUCTURAL
OTHER:	--
OTHER:	--

SHEET NOTES

SHEET

S802

STANDARD STEEL JOINERY

PLATES

-USE PROVIDED ZINC COATED 1/2"X4-1/2" THRU BOLTS (A307 MIN) W/ WASHERS

-2 PLATES ARE USED PLACE 1 PLATE ON EACH SIDE OF BENT UNLESS NOTED OTHERWISE ON PLANS

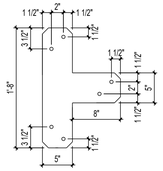

LARGE T-PLATE
1/4" A36 STEEL

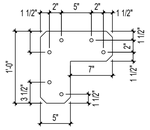

LARGE L-PLATE
1/4" A36 STEEL

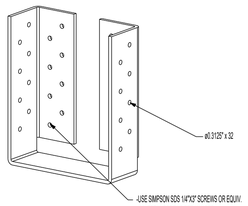

8" CF HANGER
1/4" A36 STEEL

BRACKETS

-USE PROVIDED ZINC COATED 1/2" DIA. LAG BOLTS (GRADE 5 MIN)
-1/2"X6" SIMPSON TITEN HD ZINC COATED ANCHORS @ FOUNDATION
-USE PROVIDED ZINC COATED 1/2"X4-1/2" THRU BOLTS (A307 MIN)

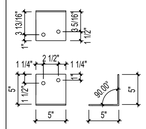

SILL BRACKET
3/16" A36 STEEL

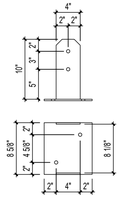

U BRACKET 8X8
1/4" A36 STEEL

SCREW ATTACHMENT DETAIL

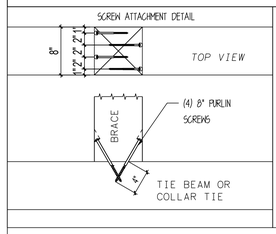

SCREW ATTACHMENT DETAIL

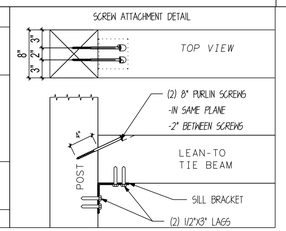

8" PURLIN SCREWS (CONSTRUCTION LAG SCREW)
THREAD DIA: #17 OR .310
HEAD DIA: 11/16"
SHANK DIA: .226
RECESS SIZE: T40

10" PURLIN SCREWS (CONSTRUCTION LAG SCREW)
THREAD DIA: #17 OR .310
HEAD DIA: 11/16"
SHANK DIA: .226
RECESS SIZE: T40

STEAMBOAT

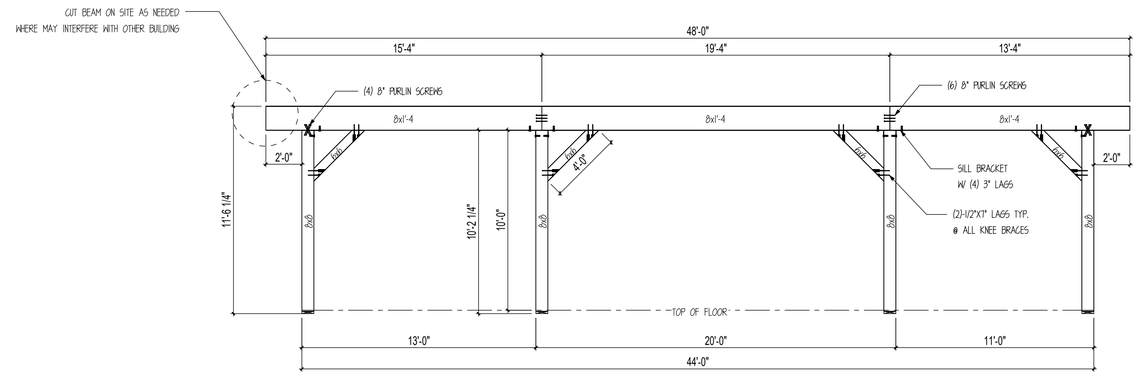

BENT #9
SCALE: 1/4" = 1'

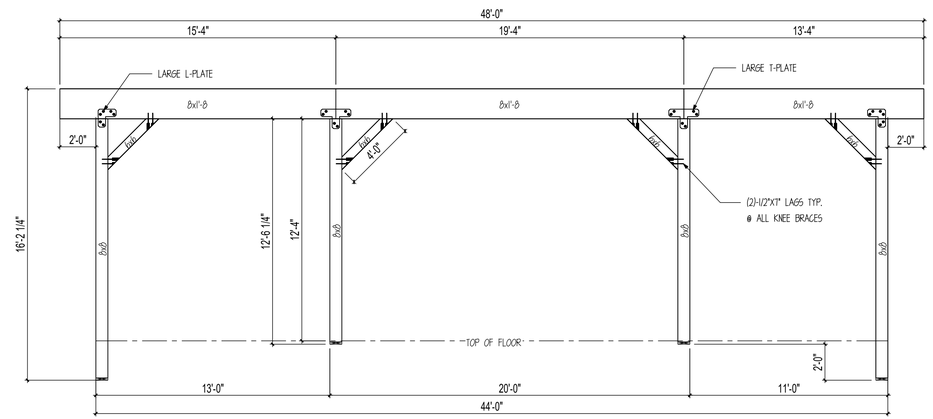

BENT #10
SCALE: 1/4" = 1'

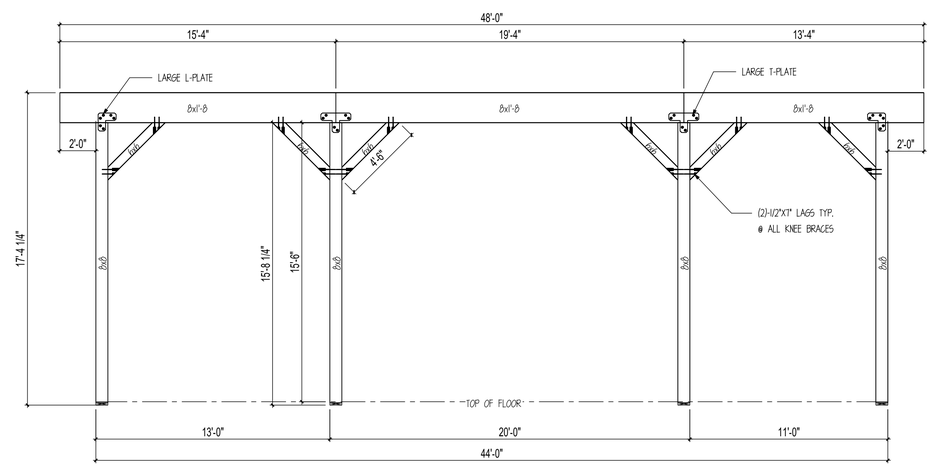

BENT #11
SCALE: 1/4" = 1'

COLORADO LICENSED
BRIAN R. HEMANN
32718
PROFESSIONAL ENGINEER

SealPact 2024-10-18 09:57:53 EST
Click seal or scan QR Code for verification; otherwise not valid.

TIMBERLYNE

www.timberlyne.com

Nebraska: 116 West 1st Street
Wayne, NE 68787
888-489-1680
Texas: 613 Hwy 46 E.
Boerne, TX 78006
877-680-1680

© 2021 Timberlyne, All Rights Reserved.
THIS PLAN AND DESIGNS CONTAINED HERIN ARE THE PROPERTY OF TIMBERLYNE GROUP™ AND MAY NOT BE REPRODUCED WITHOUT PRIOR WRITTEN CONSENT FROM TIMBERLYNE GROUP™.

CUSTOMER INFORMATION:

DAN MCENTEE

PROJECT INFORMATION:

MCENTEE GROUP HOME

200&202 SUNDANCE CT
STEAMBOAT SPRINGS,CO 80487

NUMBER:	MGR0524-1
CATEGORY:	Residential
STYLE:	SINGLE SLOPE
OTHER:	--
OTHER:	--
PM:	CM

DRAWING INFORMATION:

DRAWN BY:	BL
DATE:	10/16/24
STATUS:	STRUCTURAL
OTHER:	--
OTHER:	--

SHEET NOTES

1. BASE OF MAIN FRAME POST CUT TO FIT IN FIELD BY GENERAL CONTRACTOR ACCORDING TO SPECS ON CUT LISTS. CUT BOTTOM OF POST ONLY.

SHEET

S900

STEAMBOAT

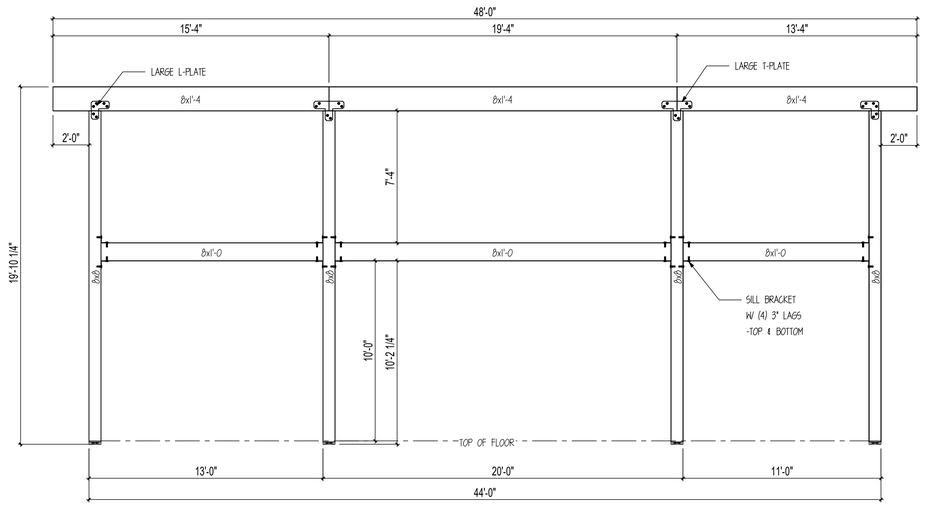

BENT #12

SCALE: 1/4" = 1'

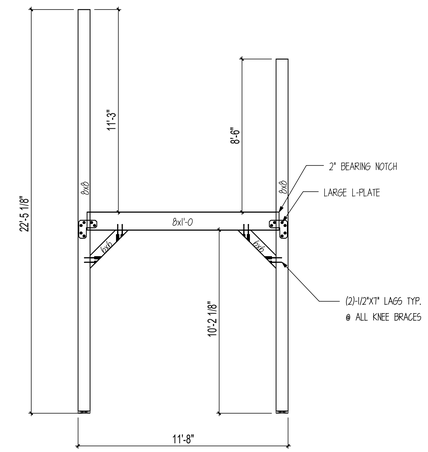

BENT #13

SCALE: 1/4" = 1'

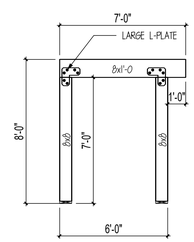

BENT #14

SCALE: 1/4" = 1'

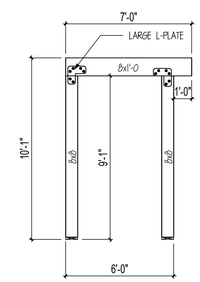

BENT #15

SCALE: 1/4" = 1'

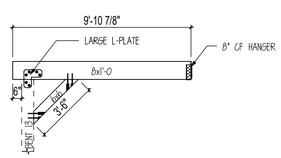

HEADER A

SCALE: 1/4" = 1'

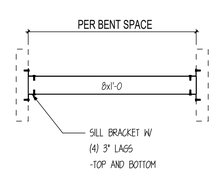

BENT SPACER 1

SCALE: 1/4" = 1'

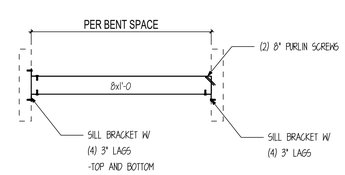

BENT SPACER 2

SCALE: 1/4" = 1'

COLORADO LICENSED
BRYAN B. LEMAY
32718
PROFESSIONAL ENGINEER

SealPact 2024-10-18 09:57:53 EST
Click seal or scan QR Code for verification; otherwise not valid.

TIMBERLYNE

www.timberlyne.com

Nebraska: 116 West 1st Street
Wayne, NE 68787
888-489-1680
Texas: 613 Hwy 46 E.
Boerne, TX 78006
877-680-1680

© 2021 Timberlyne, All Rights Reserved.
THIS PLAN AND DESIGNS CONTAINED HERIN ARE THE PROPERTY OF TIMBERLYNE GROUP™ AND MAY NOT BE REPRODUCED WITHOUT PRIOR WRITTEN CONSENT FROM TIMBERLYNE GROUP™.

CUSTOMER INFORMATION:

DAN MCENTEE

PROJECT INFORMATION:

MCENTEE GROUP HOME

200&202 SUNDANCE CT
STEAMBOAT SPRINGS,CO 80487

NUMBER:	MGR0524-1
CATEGORY:	Residential
STYLE:	SINGLE SLOPE
OTHER:	--
OTHER:	--
PM:	CM

DRAWING INFORMATION:

DRAWN BY:	BL
DATE:	10/16/24
STATUS:	STRUCTURAL
OTHER:	--
OTHER:	--

SHEET NOTES

1. BASE OF MAIN FRAME POST CUT TO FIT IN FIELD BY GENERAL CONTRACTOR ACCORDING TO SPECS ON CUT LISTS. CUT BOTTOM OF POST ONLY.

SHEET

S901

STEAMBOAT

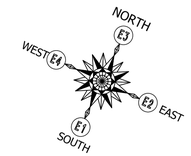

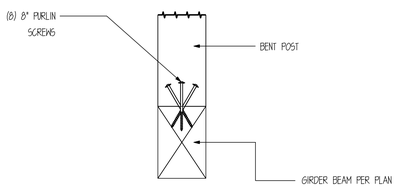

1 **POST CONNECTION DETAIL**

SCALE : 1" =1'-0"

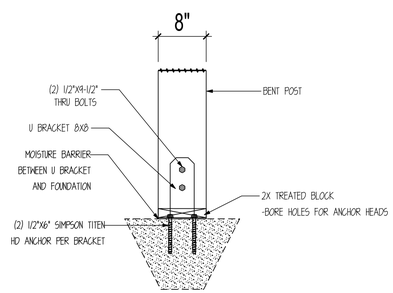

2 **POST CONNECTION DETAIL**

SCALE : 1" =1'-0"

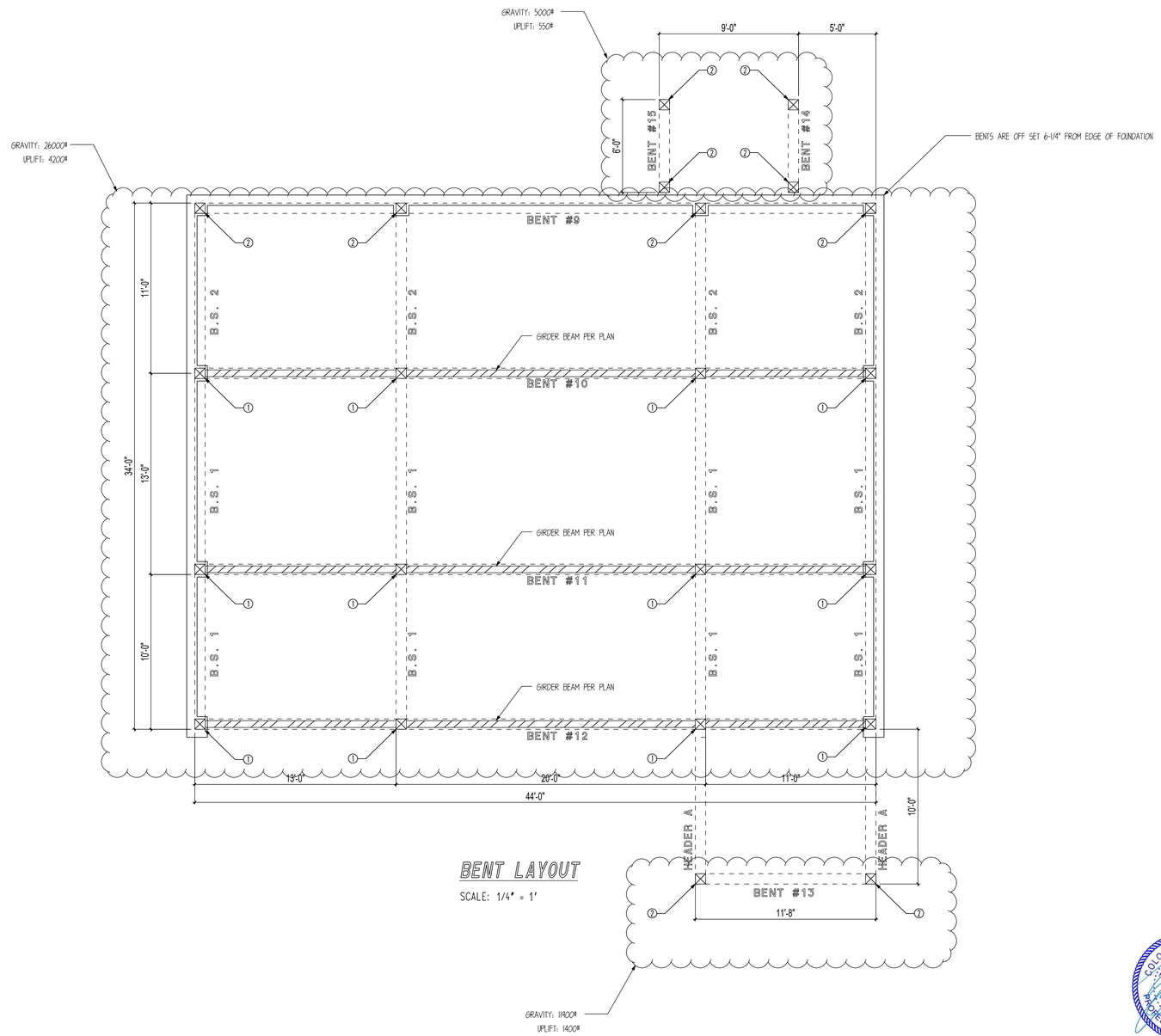

BENT LAYOUT

SCALE: 1/4" = 1'

SealPact 2024-10-18 09:57:53 EST
Click seal or scan QR Code for verification; otherwise not valid.

TIMBERLYNE

www.timberlyne.com

Nebraska: 116 West 1st Street
Wayne, NE 68787
888-489-1680
Texas: 613 Hwy 46 E.
Boerne, TX 78006
877-680-1680

© 2021 Timberlyne, All Rights Reserved.
THIS PLAN AND DESIGNS CONTAINED HERIN ARE THE PROPERTY OF TIMBERLYNE GROUP™ AND MAY NOT BE REPRODUCED WITHOUT PRIOR WRITTEN CONSENT FROM TIMBERLYNE GROUP™.

CUSTOMER INFORMATION:

DAN MCENTEE

PROJECT INFORMATION:

MCENTEE GROUP HOME

200&202 SUNDANCE CT
STEAMBOAT SPRINGS,CO 80487

NUMBER:	MGR0524-1
CATEGORY:	Residential
STYLE:	SINGLE SLOPE
OTHER:	--
OTHER:	--
PM:	CM

DRAWING INFORMATION:

DRAWN BY:	BL
DATE:	10/16/24
STATUS:	STRUCTURAL
OTHER:	--
OTHER:	--

SHEET NOTES

1. BASE OF MAIN FRAME POST CUT TO FIT IN FIELD BY GENERAL CONTRACTOR ACCORDING TO SPECS ON CUT LISTS. CUT BOTTOM OF POST ONLY.

SHEET

S1000

STEAMBOAT

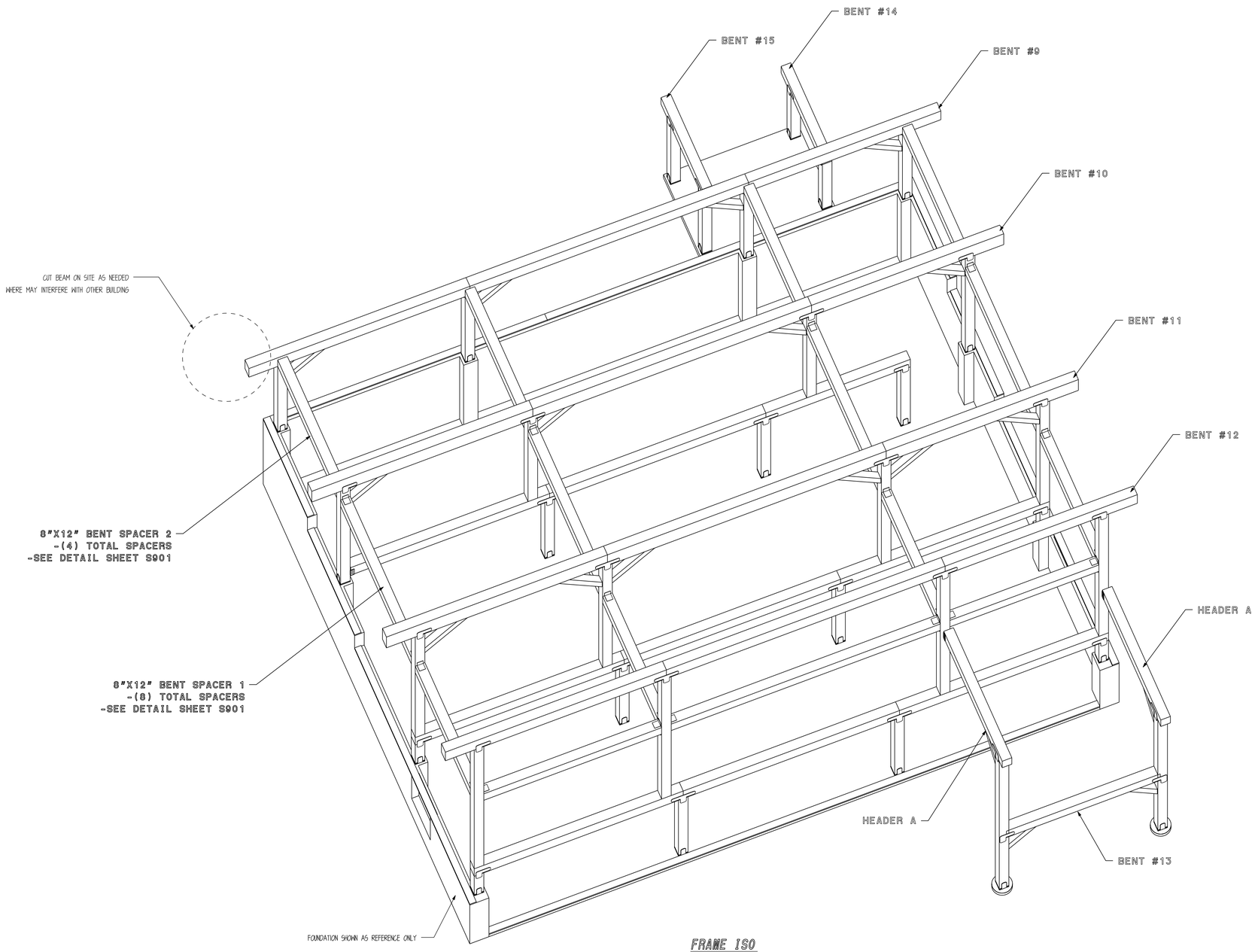

FRAME ISO

SCALE: N.T.S.

COLORADO LICENSED
DAN R. MCENTEE
32718
PROFESSIONAL ENGINEER

SealPact 2024-10-18 09:57:53 EST
Click seal or scan QR Code for verification; otherwise not valid.

TIMBERLYNE

www.timberlyne.com

Nebraska: 116 West 1st Street
Wayne, NE 68787
888-489-1680
Texas: 613 Hwy 46 E.
Boerne, TX 78006
877-680-1680

© 2021 Timberlyne, All Rights Reserved.
THIS PLAN AND DESIGNS CONTAINED HERIN ARE THE PROPERTY OF TIMBERLYNE GROUP™ AND MAY NOT BE REPRODUCED WITHOUT PRIOR WRITTEN CONSENT FROM TIMBERLYNE GROUP™.

CUSTOMER INFORMATION:

DAN MCENTEE

PROJECT INFORMATION:

MCENTEE GROUP HOME

200&202 SUNDANCE CT
STEAMBOAT SPRINGS,CO 80487

NUMBER:	MGR0524-1
CATEGORY:	Residential
STYLE:	SINGLE SLOPE
OTHER:	--
OTHER:	--
PM:	CM

DRAWING INFORMATION:

DRAWN BY:	BL
DATE:	10/16/24
STATUS:	STRUCTURAL
OTHER:	--
OTHER:	--

SHEET NOTES

1. BASE OF MAIN FRAME POST CUT TO FIT IN FIELD BY GENERAL CONTRACTOR ACCORDING TO SPECS ON CUT LISTS. CUT BOTTOM OF POST ONLY.

SHEET

S1001

SHEAR WALL SCHEDULE

MARK	WALL SHEATHING	NAIL SIZE	EDGE NAIL SPACING	FIELD NAIL SPACING	SPECIAL NOTES
1	1/2" OSB SHEATHING	8D NAILS	6" O.C.	12" O.C.	--
2	1/2" OSB SHEATHING	8D NAILS	4" O.C.	12" O.C.	--
3	1/2" OSB SHEATHING	8D NAILS	3" O.C.	12" O.C.	--

SHEARWALL NOTES:

1. VERT. 2X6 (NOM) STUDS @ 16" O.C. MAX.
2. ALL FIELD NAILING TO BE 12" O.C. AND ALL UNSUPPORTED PANEL EDGES ARE TO BE BLOCKED.
3. ALL SHEAR WALLS HAVE 2x6 TREATED SILL PLATE.
4. ALL SILL PLATE ANCHORED TO FOUNDATION W/ 1/2"X6" SIMPSON TITEN HD ANCHORS.
5. ANCHOR BOLTS SHALL BE PLACED @ ALL JAMBS, CORNERS, AND INTERSECTIONS.
6. FIELD VERIFY ALL DOOR AND WINDOW OPENINGS ON SITE PRIOR TO FRAMING OPENINGS.

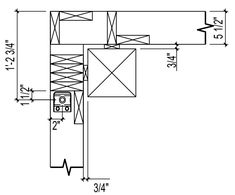

HDU LOCATION DETAILS

SCALE: 1" = 1'

HOLDOWN DESCRIPTIONS
-REFER TO MANUF. SPECS FOR FURTHER INFORMATION ABOUT PRODUCT AND ATTACHMENTS -USE SIMPSON SET EPOXY OR EQUIV.
SIMPSON HDU8-SDS2.5 ATTACH INTO MIN. 3.5" FRAMING W/ 20 SDS 1/4"X2-1/2" SCREWS. ANCHOR INTO FOUNDATION W/ 7/8" DIA. THREADED ROD (EPOXY SET) MIN. 12" EMBEDMENT.

** HOLDOWN UPLIFT 5800#, MAX SHEAR PARALLEL TO WALL: 400PLF**

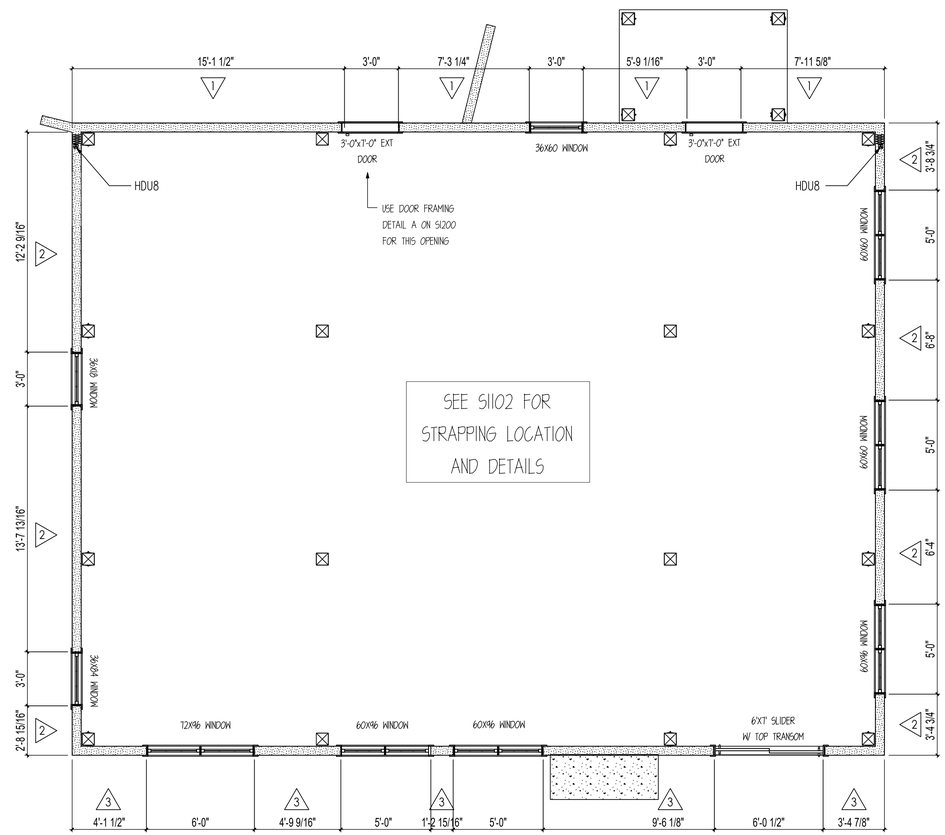

SEE S1102 FOR STRAPPING LOCATION AND DETAILS

MAIN FLOOR SHEAR WALL LAYOUT

SCALE: 1/4" = 1'

NOTE: CONTRACTOR TO FIELD VERIFY OPENING SIZES PRIOR TO FRAMING.

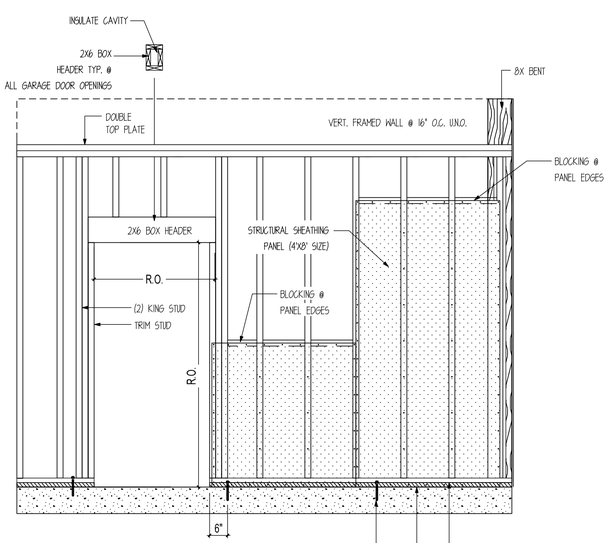

SHEARWALL PANEL ATTACHMENT DETAIL

SCALE: 1/2" = 1'

NOTE: SEE SHEARWALL SCHEDULE FOR ALL PANEL ATTACHMENTS AT PANEL EDGES AND IN THE FIELD OF THE PANEL.

STEAMBOAT

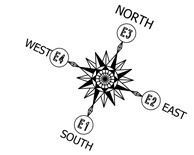

COLORADO LICENSED
ZACHARY B. LEHNEN
32718
PROFESSIONAL ENGINEER

SealPact 2024-10-18 09:57:53 EST
Click seal or scan QR Code for verification; otherwise not valid.

TIMBERLYNE

www.timberlyne.com

Nebraska: 116 West 1st Street
Wayne, NE 68787
888-489-1680
Texas: 613 Hwy 46 E.
Boerne, TX 78006
877-680-1680

© 2021 Timberlyne, All Rights Reserved.
THIS PLAN AND DESIGNS CONTAINED HERIN ARE THE PROPERTY OF TIMBERLYNE GROUP™ AND MAY NOT BE REPRODUCED WITHOUT PRIOR WRITTEN CONSENT FROM TIMBERLYNE GROUP™.

CUSTOMER INFORMATION:

DAN MCENTEE

PROJECT INFORMATION:

MCENTEE GROUP HOME

200&202 SUNDANCE CT
STEAMBOAT SPRINGS,CO 80487

NUMBER:	MGR0524-1
CATEGORY:	Residential
STYLE:	SINGLE SLOPE
OTHER:	--
OTHER:	--
PM:	CM

DRAWING INFORMATION:

DRAWN BY:	BL
DATE:	10/16/24
STATUS:	STRUCTURAL
OTHER:	--
OTHER:	--

SHEET NOTES

SHEET

S1100

STEAMBOAT

SHEAR WALL SCHEDULE

MARK	WALL SHEATHING	NAIL SIZE	EDGE NAIL SPACING	FIELD NAIL SPACING	SPECIAL NOTES
1	1/2" OSB SHEATHING	8D NAILS	6" O.C.	12" O.C.	--
2	1/2" OSB SHEATHING	8D NAILS	4" O.C.	12" O.C.	--
3	1/2" OSB SHEATHING	8D NAILS	3" O.C.	12" O.C.	--

SHEARWALL NOTES:

1. VERT. 2X6 (NOM) STUDS @ 16" O.C. MAX.
2. ALL FIELD NAILING TO BE 12" O.C. AND ALL UNSUPPORTED PANEL EDGES ARE TO BE BLOCKED.
3. ALL SHEAR WALLS HAVE 2x6 TREATED SILL PLATE.
4. ALL SILL PLATE ANCHORED TO FOUNDATION W/ 1/2"X6" SIMPSON TITEN HD ANCHORS.
5. ANCHOR BOLTS SHALL BE PLACED @ ALL JAMBS, CORNERS, AND INTERSECTIONS.
6. FIELD VERIFY ALL DOOR AND WINDOW OPENINGS ON SITE PRIOR TO FRAMING OPENINGS.

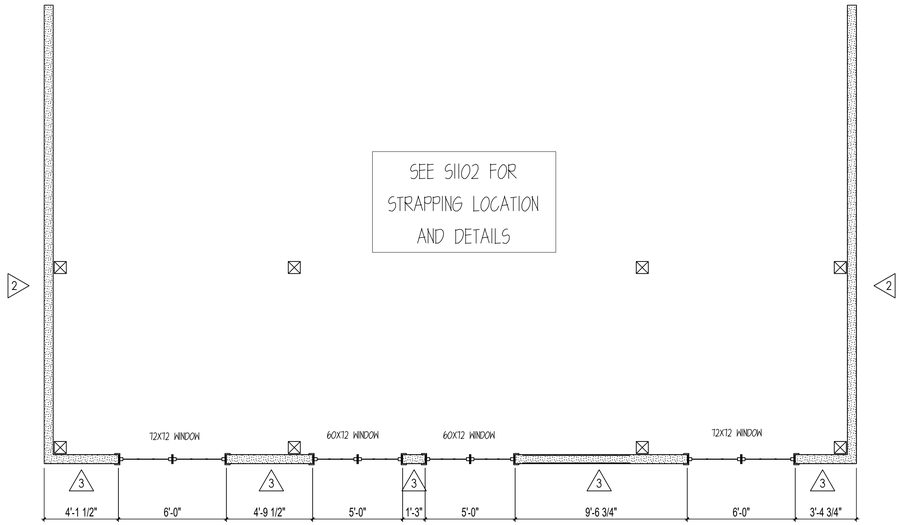

UPPER SHEAR WALL LAYOUT

SCALE: 1/4" = 1'

NOTE: CONTRACTOR TO FIELD VERIFY OPENING SIZES PRIOR TO FRAMING.

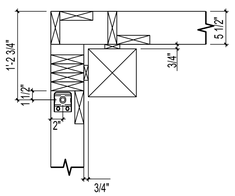

HDU LOCATION DETAILS

SCALE: 1" = 1'

HOLDOWN DESCRIPTIONS
-REFER TO MANUF. SPECS FOR FURTHER INFORMATION ABOUT PRODUCT AND ATTACHMENTS -USE SIMPSON SET EPOXY OR EQUIV.
SIMPSON HDU8-SDS2.5 ATTACH INTO MIN. 3.5" FRAMING W/ 20 SDS 1/4"X2-1/2" SCREWS. ANCHOR INTO FOUNDATION W/ 7/8" DIA. THREADED ROD (EPOXY SET) MIN. 12" EMBEDMENT.

** HOLDOWN UPLIFT 5800#. MAX SHEAR PARALLEL TO WALL: 400PLF**

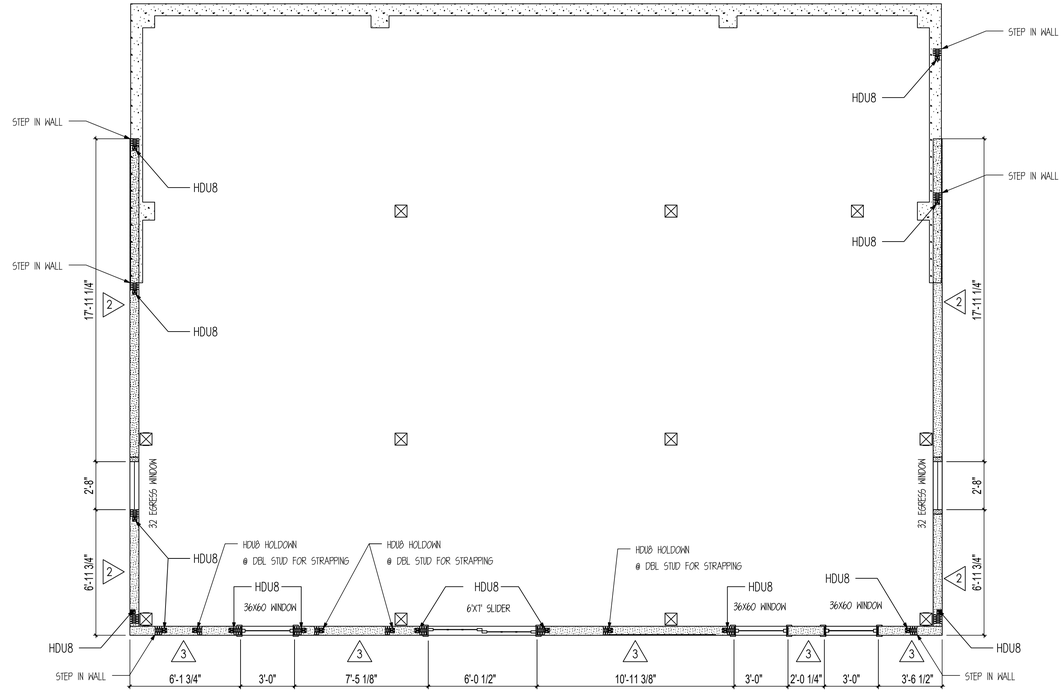

LOWER SHEAR WALL LAYOUT

SCALE: 1/4" = 1'

NOTE: CONTRACTOR TO FIELD VERIFY OPENING SIZES PRIOR TO FRAMING.

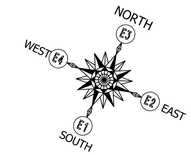

SealPact 2024-10-18 09:57:54 EST
Click seal or scan QR Code for verification; otherwise not valid.

TIMBERLYNE

www.timberlyne.com

Nebraska: 116 West 1st Street
Wayne, NE 68787
888-489-1680
Texas: 613 Hwy 46 E.
Boerne, TX 78006
877-680-1680

© 2021 Timberlyne, All Rights Reserved.
THIS PLAN AND DESIGNS CONTAINED HERIN ARE THE PROPERTY OF TIMBERLYNE GROUP™ AND MAY NOT BE REPRODUCED WITHOUT PRIOR WRITTEN CONSENT FROM TIMBERLYNE GROUP™.

CUSTOMER INFORMATION:

DAN MCENTEE

PROJECT INFORMATION:

MCENTEE GROUP HOME

200&202 SUNDANCE CT
STEAMBOAT SPRINGS,CO 80487

NUMBER:	MGR0524-1
CATEGORY:	Residential
STYLE:	SINGLE SLOPE
OTHER:	--
OTHER:	--
PM:	CM

DRAWING INFORMATION:

DRAWN BY:	BL
DATE:	10/16/24
STATUS:	STRUCTURAL
OTHER:	--
OTHER:	--

SHEET NOTES

SHEET

S1101

STRAPPING DESCRIPTIONS
-SIMPSON CMSTC16 STRAP -25" MIN. END LENGTH -ATTACH INTO DBL STUD

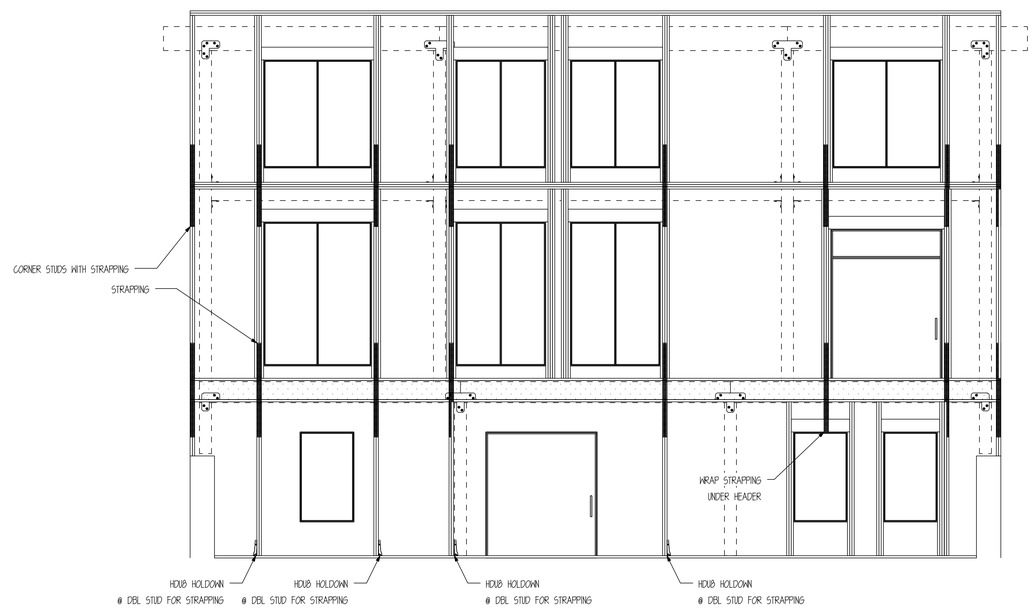

WALL FRAMING FOR STRAP LAYOUT

SCALE: 1/4" = 1'

NOTE: CONTRACTOR TO FIELD VERIFY OPENING SIZES PRIOR TO FRAMING.

COLORADO LICENSED
ADAM B. UZAMERE
32718
PROFESSIONAL ENGINEER

SealPact 2024-10-18 09:57:54 EST
Click seal or scan QR Code for verification; otherwise not valid.

TIMBERLYNE

www.timberlyne.com

Nebraska: 116 West 1st Street
Wayne, NE 68787
888-489-1680
Texas: 613 Hwy 46 E.
Boerne, TX 78006
877-680-1680

© 2021 Timberlyne, All Rights Reserved.
THIS PLAN AND DESIGNS CONTAINED HERIN ARE THE PROPERTY OF TIMBERLYNE GROUP™ AND MAY NOT BE REPRODUCED WITHOUT PRIOR WRITTEN CONSENT FROM TIMBERLYNE GROUP™.

CUSTOMER INFORMATION:

DAN MCENTEE

PROJECT INFORMATION:

MCENTEE GROUP HOME

200&202 SUNDANCE CT
STEAMBOAT SPRINGS,CO 80487

NUMBER:	MGR0524-1
CATEGORY:	Residential
STYLE:	SINGLE SLOPE
OTHER:	--
OTHER:	--
PM:	CM

DRAWING INFORMATION:

DRAWN BY:	BL
DATE:	10/16/24
STATUS:	STRUCTURAL
OTHER:	--
OTHER:	--

SHEET NOTES

SHEET

S1102

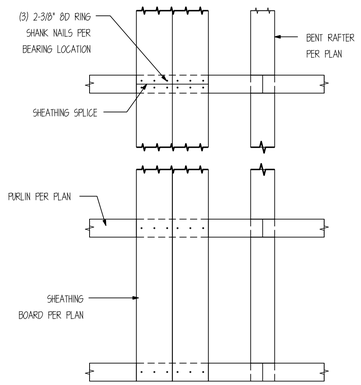

ROOF SHEATHING ATTACHMENT DETAILS

NOTE: FASTENERS NOT SUPPLIED IN SAND CREEK POST & BEAM BARN KIT

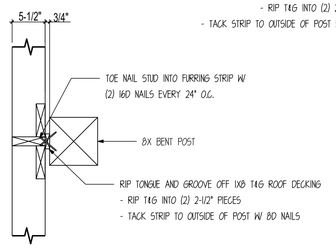

2X6 (NOM) WALL ATTACHMENT OUTSIDE BENT POSTS DETAIL

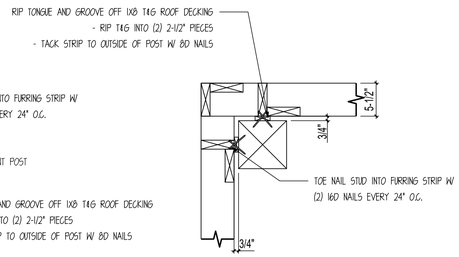

2X6 (NOM) WALL ATTACHMENT @ CORNER BENT POSTS DETAIL

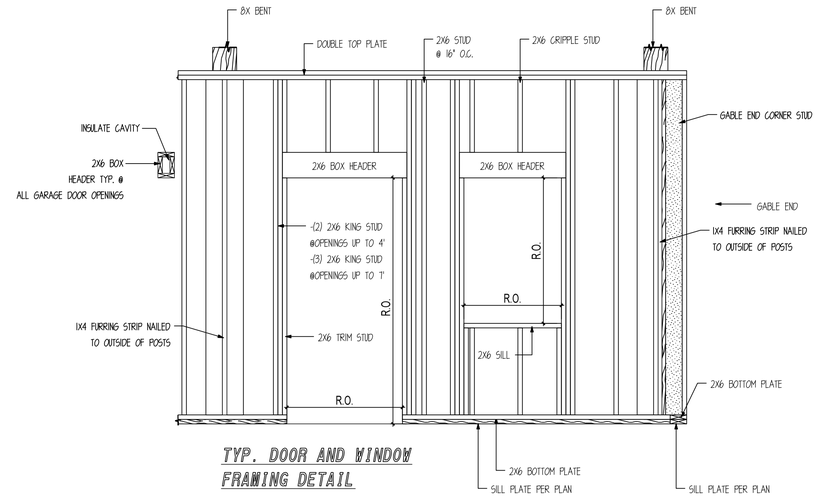

TYP. DOOR AND WINDOW FRAMING DETAIL

*** CONTRACTOR TO VERIFY OPENING SIZE PRIOR TO FRAMING ***

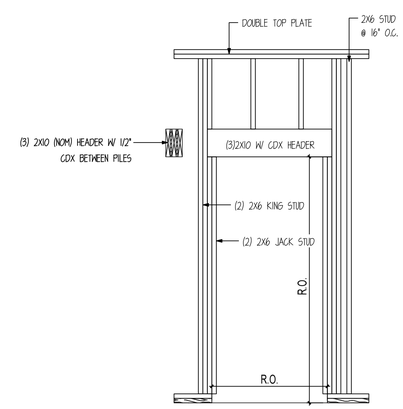

DOOR FRAMING DETAIL A

*** CONTRACTOR TO VERIFY OPENING SIZE PRIOR TO FRAMING ***

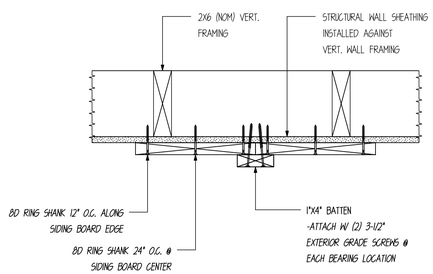

SIDING & BATTEN ATTACH. DETAIL

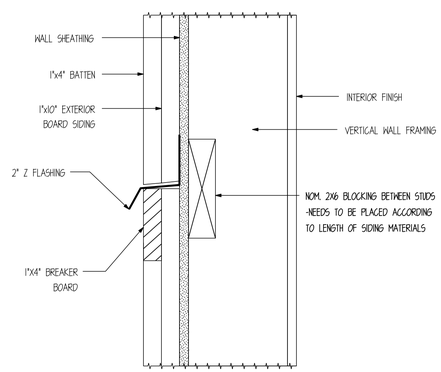

BREAKER BOARD/ SIDING SPLICE DETAIL

FASTENING SCHEDULE

CONNECTION	FASTENING	LOCATION
TOP PLATE TO STUD AND NAIL	2-16d	------
STUD TO BOTTOM PLATE	4-8d, TOENAIL OR 2-16d, END NAIL	------
DOUBLE STUDS, FACE NAIL	16d @ 24" (610 mm) O.C.	------
DOUBLED TOP PLATES, TYP FACE NAIL	16d @ 16" (406 mm) O.C.	------
CONTINUOUS HEADER, TWO PIECES	16d @ 16" (406 mm) O.C. ALONG EACH EDGE	------
CONTINUOUS HEADER TO STUD, TOENAIL	4-8d	
STRUCTURAL WALL SHEATHING	SEE SHEAR WALL PLAN	SEE SHEAR WALL PLAN
1X10 & 1X12 SIDING	8D GALV. RING SHANK NAILS 12" O.C.	VERT. BOARD EDGE
1X2 & 1X4 BATTEN	(2)-EXTERIOR GRADE SCREWS @ 24" O.C.	OVER VERT. SIDING SEAMS
PURLINS TO BENTS	(2)-#11X12" SCREWS (PURLIN SCREWS)	@ EA. END.
1"X8" STRUCTURAL ROOF SHEATHING	(3)-8D GALV. RING SHANK	@ EA. BEARING LOCATION
LOFT JOIST TO TIE BEAM	(2)-16D	TOENAIL
2X6 T&G DECKING TO JOISTS	(2)-16D	BLIND & FACE NAIL
ROOF NAILBASE INS. PANEL TO PURLINS OR FURRING STRIPS	(24)-INSULATION PANEL SCREWS..... (21)-INSULATION PANEL SCREWS.....	EA. 4'X8' PANEL (FIELD OF ROOF) EA. 4'X8' PANEL (PERIMITER OF ROOF)

GENERAL NOTES:
- FOR NAILING NOT SHOWN ON THESE DRAWINGS REFER TO IBC NAILING SCHEDULE
- ALL NAILS TO BE PROVIDED BY CUSTOMER OR GENERAL CONTRACTOR
- NOT ALL MATERIALS IN SCHEDULE MAY BE USED ON THIS PLAN.
- ALL NAILS COMMON UNLESS NOTED
- PURLIN SCREWS PROVIDED BY TIMBERLYNE.

COLORADO LICENSED
ISAAC B. UZMAN
32718
PROFESSIONAL ENGINEER

SealPact 2024-10-18 09:57:54 EST
Click seal or scan QR Code for verification; otherwise not valid.

NOTE: WALLS TO BE VERTICAL FRAMED OUTSIDE OF POSTS

TIMBERLYNE

www.timberlyne.com

Nebraska: 116 West 1st Street
Wayne, NE 68787
888-489-1680
Texas: 613 Hwy 46 E.
Boerne, TX 78006
877-680-1680

© 2021 Timberlyne, All Rights Reserved.
THIS PLAN AND DESIGNS CONTAINED HERIN ARE THE PROPERTY OF TIMBERLYNE GROUP™ AND MAY NOT BE REPRODUCED WITHOUT PRIOR WRITTEN CONSENT FROM TIMBERLYNE GROUP™.

CUSTOMER INFORMATION:

DAN MCENTEE

PROJECT INFORMATION:

MCENTEE GROUP HOME

200&202 SUNDANCE CT
STEAMBOAT SPRINGS,CO 80487

NUMBER:	MGR0524-1
CATEGORY:	Residential
STYLE:	SINGLE SLOPE
OTHER:	--
OTHER:	--
PM:	CM

DRAWING INFORMATION:

DRAWN BY:	BL
DATE:	10/16/24
STATUS:	STRUCTURAL
OTHER:	--
OTHER:	--

SHEET NOTES

SHEET

S1200

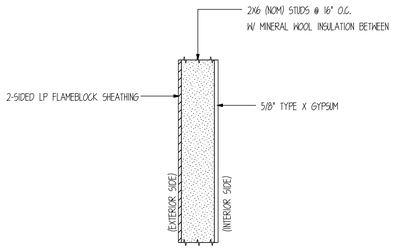

V EXTERIOR FIRE WALL DETAIL

SCALE : 1" =1'-0"

1-HOUR ETIHER SIDE
LOAD RESTRICTED TO 73% STUD CAPACITY, CALCULATED ASSUMING A SLENDERNESS RATIO OF I/D=21

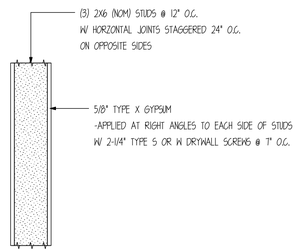

W INTERIOR FIRE WALL DETAIL

SCALE : 1" =1'-0"

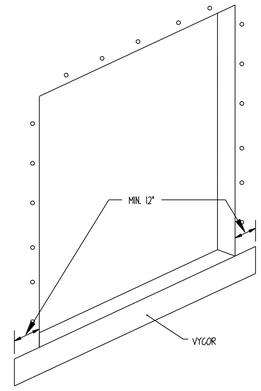

STEP 1

INSTALL 12" WIDE MOISTSTOP PER DIAGRAM, LEAVING RELEASE PAPER ON BACKSIDE, PLACE PAPER SIDE AGAINST SHEATHING AND ATTACH BY STAPLING OR NAILING ALONG TOP EDGE.

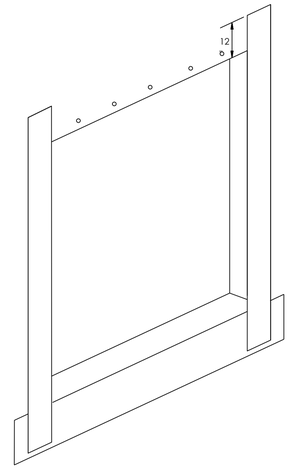

INSTALL 12" MOISTSTOP JAMB PIECES PER DIAGRAM, ADHERING TO SHEATHING AND FRAMING.

FOR ADDITIONAL ATTACHMENT, STAPLE PERIMETER EDGES ABOVE SILL AREA.

UPON COMPLETION OF STEPS (1 THRU 4) USING A J-ROLLER, APPLY PRESSURE AND ROLL ENTIRE SURFACE OF MOISTSTOP TO REMOVE WRINKLES & AIR POCKETS.

STEP 2

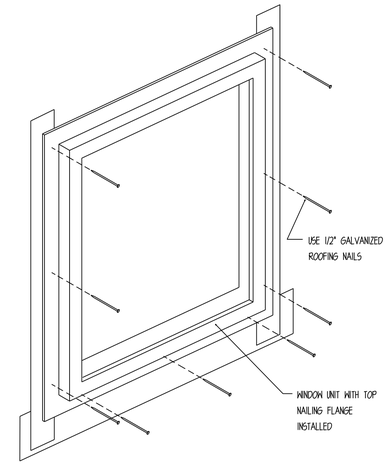

STEP 3

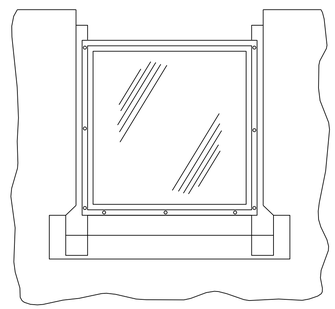

STEP 4

PLACE 60 MIN BUILDING PAPER AROUND WINDOWS AS SHOWN CONTINUOUS AROUND STRUCTURE - REMOVE BACKING FROM MOISTSTOP SILL PIECE AND ADHERE TO BUILDING WRAP

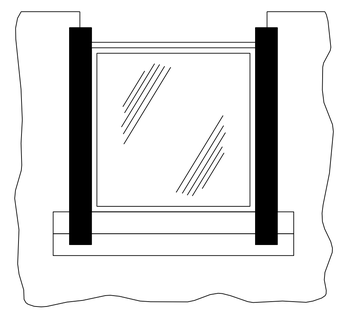

STEP 5

INSTALL 20 MIL VYCOR TAPE PER DIAGRAM ADHERING TO THE WINDOW SILL NAILING FLANGE.

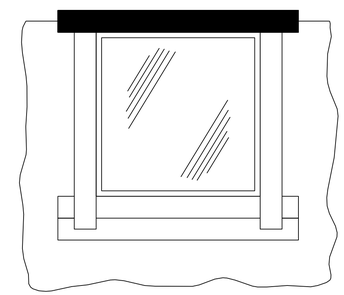

STEP 6

INSTALL 20 MIL. VYCOR PER DIAGRAM, ADHERING TO THE WINDOW HEAD FLANGE AND SHEATHING.
UPON COMPLETION OF STEPS, USING A J-ROLLER, APPLY PRESSURE AND ROLL ENTIRE SURFACE OF VYCOR TO REMOVE WRINKLES AND AIR POCKETS.

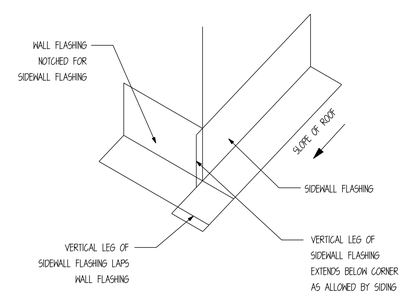

KICK-OUT FLASHING

SCALE: N.T.S.

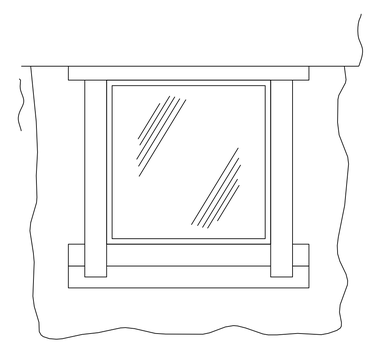

STEP 7

INSTALL 60 MIN. BUILDING PAPER AS SHOWN CONTINUOUS AROUND STRUCTURE

SealPact 2024-10-18 09:57:54 EST
Click seal or scan QR Code for verification; otherwise not valid.

TIMBERLYNE

www.timberlyne.com

Nebraska: 116 West 1st Street
Wayne, NE 68787
888-489-1680
Texas: 613 Hwy 46 E.
Boerne, TX 78006
877-680-1680

© 2021 Timberlyne, All Rights Reserved.
THIS PLAN AND DESIGNS CONTAINED HERIN ARE THE PROPERTY OF TIMBERLYNE GROUP™ AND MAY NOT BE REPRODUCED WITHOUT PRIOR WRITTEN CONSENT FROM TIMBERLYNE GROUP™.

CUSTOMER INFORMATION:

DAN MCENTEE

PROJECT INFORMATION:

MCENTEE GROUP HOME

200&202 SUNDANCE CT
STEAMBOAT SPRINGS,CO 80487

NUMBER:	MGR0524-1
CATEGORY:	Residential
STYLE:	SINGLE SLOPE
OTHER:	--
OTHER:	--
PM:	CM

DRAWING INFORMATION:

DRAWN BY:	BL
DATE:	10/16/24
STATUS:	STRUCTURAL
OTHER:	--
OTHER:	--

SHEET NOTES

SHEET

S1201

GARAGE (BY OTHER)

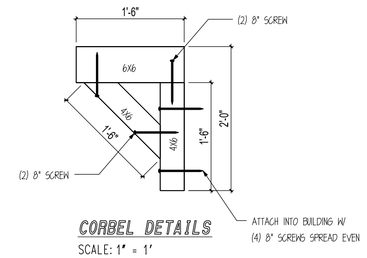

CORBEL DETAILS

SCALE: 1" = 1'

NOTE: CORBELS ARE DECORATIVE AND NOT DESIGNED TO BE LOAD BEARING

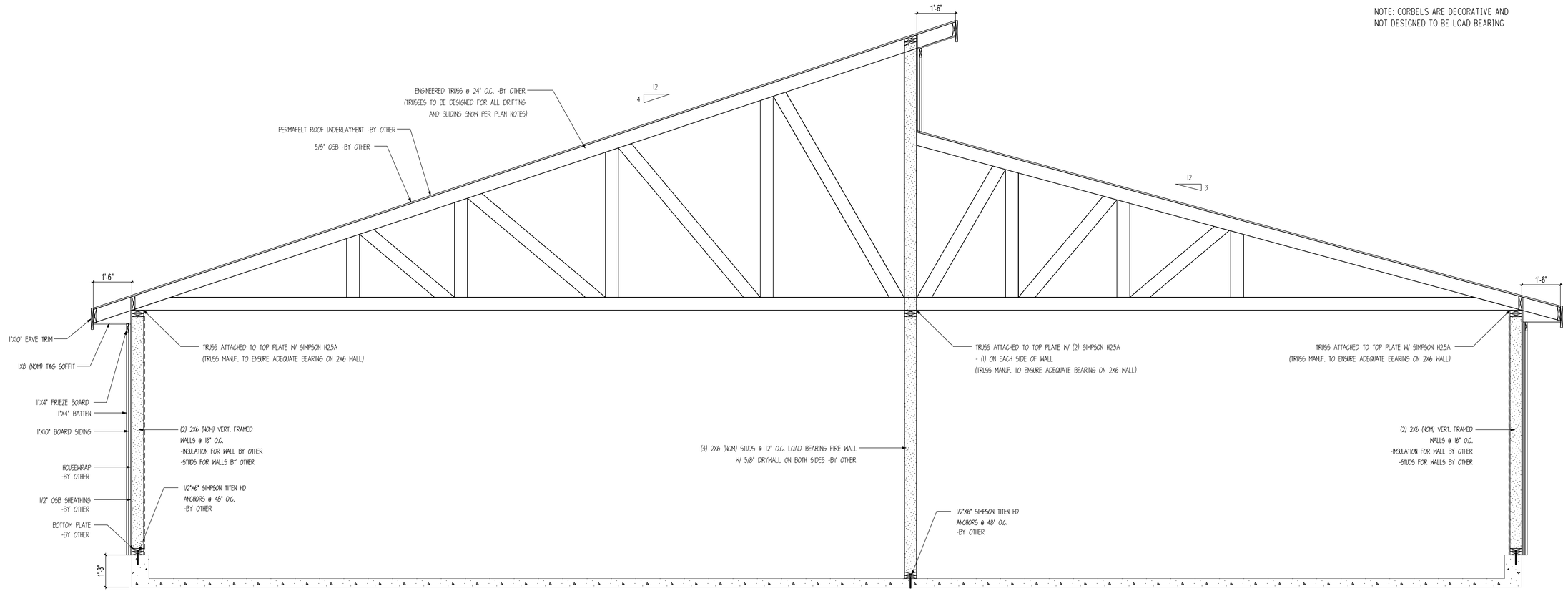

M **GARAGE FULL BUILDING SECTION**

SCALE : 1/2" = 1'

NOTE: SEE ENGINEERED TRUSS PLAN FOR MORE DETAILS AND INFORMATION ON GARAGE BUILDING

COLORADO LICENSED
RYAN B. UZMAN
32718
PROFESSIONAL ENGINEER

SealPact 2024-10-18 09:57:54 EST
Click seal or scan QR Code for verification; otherwise not valid.

TIMBERLYNE

www.timberlyne.com

Nebraska: 116 West 1st Street
Wayne, NE 68787
888-489-1680
Texas: 613 Hwy 46 E.
Boerne, TX 78006
877-680-1680

© 2021 Timberlyne, All Rights Reserved.
THIS PLAN AND DESIGNS CONTAINED HERIN ARE THE PROPERTY OF TIMBERLYNE GROUP™ AND MAY NOT BE REPRODUCED WITHOUT PRIOR WRITTEN CONSENT FROM TIMBERLYNE GROUP™.

CUSTOMER INFORMATION:

DAN MCENTEE

PROJECT INFORMATION:

MCENTEE GROUP HOME

200&202 SUNDANCE CT
STEAMBOAT SPRINGS,CO 80487

NUMBER:	MGR0524-1
CATEGORY:	Residential
STYLE:	SINGLE SLOPE
OTHER:	--
OTHER:	--
PM:	CM

DRAWING INFORMATION:

DRAWN BY:	BL
DATE:	10/16/24
STATUS:	STRUCTURAL
OTHER:	--
OTHER:	--

SHEET NOTES

SHEET

S1300

GARAGE (BY OTHER)

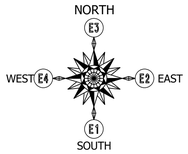

SHEAR WALL SCHEDULE

MARK	WALL SHEATHING	NAIL SIZE	EDGE NAIL SPACING	FIELD NAIL SPACING	SPECIAL NOTES
1	1/2" OSB SHEATHING	8D NAILS	6" O.C.	12" O.C.	--

SHEARWALL NOTES:

1. VERT. 2X6 (NOM) STUDS, SEE S1300 FOR REQ. STUD SPACING
2. ALL FIELD NAILING TO BE 12" O.C. AND ALL UNSUPPORTED PANEL EDGES ARE TO BE BLOCKED.
3. ALL SHEAR WALLS HAVE 2x6 TREATED SILL PLATE.
4. ALL SILL PLATE ANCHORED TO FOUNDATION W/ 1/2"X6" SIMPSON TITEN HD ANCHORS.
5. ANCHOR BOLTS SHALL BE PLACED @ ALL JAMBS, CORNERS, AND INTERSECTIONS.
6. FIELD VERIFY ALL DOOR AND WINDOW OPENINGS ON SITE PRIOR TO FRAMING OPENINGS.

HOLDOWN DESCRIPTIONS	
-REFER TO MANUF. SPECS FOR FURTHER INFORMATION ABOUT PRODUCT AND ATTACHMENTS -USE SIMPSON SET EPOXY OR EQUIV.	
	SIMPSON HDU5-SDS2.5 ATTACH INTO MIN. 3.5" FRAMING W/ 14 SDS 1/4"X2-1/2" SCREWS. ANCHOR INTO FOUNDATION W/ 5/8" DIA. THREADED ROD (EPOXY SET) MIN. 12" EMBEDMENT.

** HOLDOWN UPLIFT 3600#.**

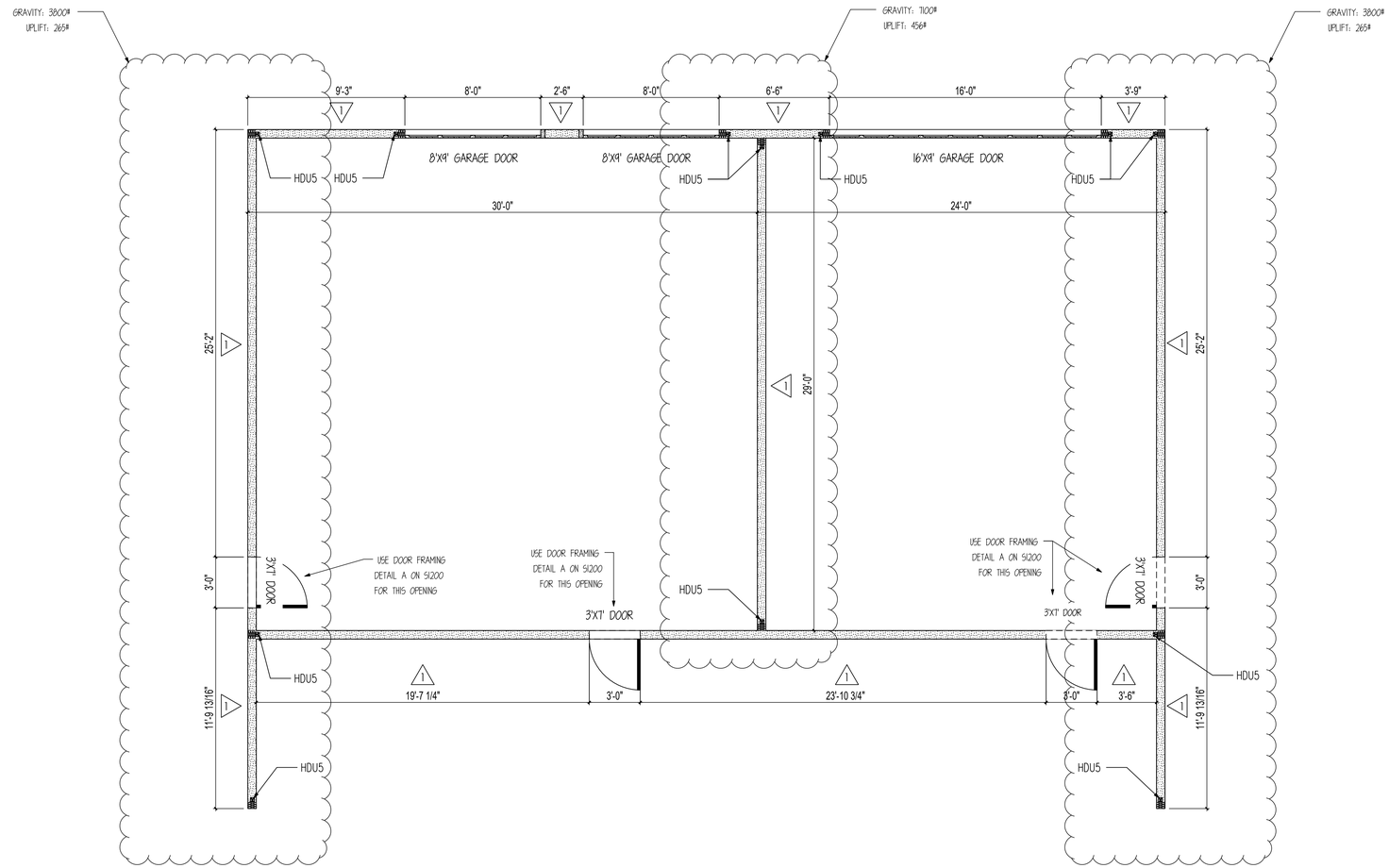

GARAGE FLOOR SHEAR WALL LAYOUT

SCALE: 1/4" = 1'

NOTE: CONTRACTOR TO FIELD VERIFY OPENING SIZES PRIOR TO FRAMING.

COLORADO LICENSED
BRIAN S. LUMAN
32718
PROFESSIONAL ENGINEER

SealPact 2024-10-18 09:57:54 EST
Click seal or scan QR Code for verification; otherwise not valid.

TIMBERLYNE

www.timberlyne.com

Nebraska: 116 West 1st Street
Wayne, NE 68787
888-489-1680
Texas: 613 Hwy 46 E.
Boerne, TX 78006
877-680-1680

© 2021 Timberlyne, All Rights Reserved.
THIS PLAN AND DESIGNS CONTAINED HERIN ARE THE PROPERTY OF TIMBERLYNE GROUP™ AND MAY NOT BE REPRODUCED WITHOUT PRIOR WRITTEN CONSENT FROM TIMBERLYNE GROUP™.

CUSTOMER INFORMATION:

DAN MCENTEE

PROJECT INFORMATION:

MCENTEE GROUP HOME

200&202 SUNDANCE CT
STEAMBOAT SPRINGS,CO 80487

NUMBER:	MGR0524-1
CATEGORY:	Residential
STYLE:	SINGLE SLOPE
OTHER:	--
OTHER:	--
PM:	CM

DRAWING INFORMATION:

DRAWN BY:	BL
DATE:	10/16/24
STATUS:	STRUCTURAL
OTHER:	--
OTHER:	--

SHEET NOTES

SHEET

S1301

ARCHITECTURAL NOTES

GENERAL
All work must comply with state and local codes, based on the local Zoning Regulations, 2021 International Building Code, 2021 International Residential Code, 2021 International Plumbing Code, 2021 the International Mechanical Code, International Fuel Gas Code, 2021 Energy Conservation Code, International Existing Building Code (if applicable), 2021 IWUICC, 2023 Colorado Model Electric & Solar Ready Code, and the 2023 National Electric code. The contractor shall comply with all laws, ordinances, rules and regulations of any public authority bearing on the performance of the work, including O.S.H.A.

Location of the utilities (electrical, telephone, cable TV, gas, water, sewer) shall be verified before construction begins.

All on site construction safety and construction means and methods are the responsibility of the contractor. There is no implication of the construction safety requirements or building methods contained in these drawings.

Actual site conditions may require that some of the components of the work should be done differently than shown on these drawings. All dimensions and conditions to be verified by the contractor prior to construction. Verify changes with the designer and engineer.

These drawings represent a simplified builder's set of plans. Additional detailing may be required of the engineer during construction upon request.

Any variation which requires a physical change from these plans must be brought to the attention of the designer and engineer in order to maintain the design intent of the project.

All work connected with this project by any trade involved shall be of the highest quality attainable in accordance with the professional practice of the trade and code standards.

DIMENSIONS
All interior and exterior dimensions are to face of stud or face of concrete, U.N.O. All exterior walls are nominal 2x6 stud construction, U.N.O. All interior walls are nominal 2x4 stud construction, U.N.O.

Do not scale drawings.

The water closet stool shall be located in a clear space of not less than 30" in width. The clear space in front of the water closet stool shall be not less than 21".

Attic access shall be provided w/ a min. clear opening of 22"x30" and min. 30" head height.

Minimum clear ceiling height is 7ft for habitable space & hallways & 6'-8" for bathrooms, laundry rooms & stairs. Exceptions apply for sloped ceilings and basements per R305

If any discrepanciesare found in these drawings notify engineer and/or designer immediately.

Exterior roofs, flashing, ledges, concrete & other surfaces shall slope min. 1#4:12 to prevent water ponding. Landings shall also slope max. 1#4:12 to prevent slipping. Covered garages or carports floor surface shall slope min. 1#8:12 to provide positive drainage to drain.

WALLS
Exterior walls open to the outside air must have a class IIVapor retarder ("smart vapor retarder" or kraft faced batt with .1 - 1.0 perm) on the inside of the framed wall (IRC R702.7). However, if min. R-15 spray foam is used in the exterior wall, Class III vapor retarder (1 - 10 perm) can be used w/o a class II vapor retarder on the inside of the wall (IRC, Section R702.7.1). Basement or exterior walls below grade shall only have a Class III vapor retarder on the interior of the wall to allow drying to the interior.

CRAWL SPACE
Unvented crawl spaces shall have Class I vapor retarder (sheet polyethylene, or material w/ perm rating less than .1) covering exposed earth per R408.3. Overlap vapor retarder joints min. 6" and seal or tape seams. Extend & seal edges min. 6" up stem walls

Crawl space access shall be provided w/ min. 18"x24" through the floor & min. 16"x24" through the wall.

If mechanical equipment is provided in a crawlspace, the min. access provided shall be large enough to remove the largest appliance but not smaller than 30"x22".

CHIMNEYS & FIREPLACES (IRC CHAPTER 10)
Wood or other combustible materials shall not be placed within 2" from the front face and sides and not less than 4" from the back of masonry fireplaces.

All masonry chimneys shall extend 2ft. higher than any portion of a building within 10' & min. 3ft. above the highest point where the chimney penetrates the roof.

STATE OF COLORADO MODEL ELECTRIC AND SOLAR READY CODE
The electrical panel shall have a reserved space for a minimum two-pole circuit breaker for each branch circuit provided for future electric equipment/appliances. The electrical receptacle, junction box and dedicated circuit breaker space shall be labeled for their intended future electric equipment or appliance use. The electrical receptacle and junction box shall be located w/in 3' of the combustion equipment/appliances or dedicated future equipment/appliances.

Min. (1) EV ready space shall be provided per dwelling unit w/ a branch circuit that terminates at a receptacle w/in 3' of each EV space. Branch circuit shall have a min. 8.3 kVA (40A 208/240V) capacity. Electrical panel, distribution equip. directory & outlets or enclosures shall be marked "For future electric vehicle supply equipment"

Electrical equipment associated with each parking space type, including branch circuits, conduit or raceway, junction boxes, receptacle, and EVSE shall be properly labeled and installed.

WINDOWS
Habitable spaces within dwelling units shall have natural light provided by exterior openings equal to 8% of the floor area. Natural ventilation shall be provided by means of operable exterior openings equal to 4% of the floor area. Laundry rooms, toilet rooms and bathrooms shall either have an operable window or be mechanically ventilated.

Safety glazing shall be provided in the following hazardous locations:
1) In doors where glazed opening is greater than 3"~
2) Within 24" adjacent to either side of doors if less than 60" above the walking surface
3) Single panes where all following conditions exist: greater than 9 sq.ft., less than 18" above the floor, top edge higher than 36" above the floor and within 36" horizontal distance of walking surface.
4) Glazing in guards and railings
5) Glazing containing wet surfaces of bathtubs, showers, pools, etc. if less than 60" to walking surface.
6) Adjacent to the bottom stair landing w/in 60" arc length if less than 36" above landing
7) Site-built Windows
8) Skylights and glazing sloped more than 15°

Sleeping rooms and basements w/ habitable space shall have min. one operable emergency escape w/ min 5.7 s.f. openable area, min. 20" clear width or min. 24" clear hgt. & max 44" sill height. (R310.2). Egress window wells shall be provided below grade and are allowed btw decks if min. 36" btw. deck

STAIRWAYS:
Stairs shall have a minimum 36" clear width at all points above the handrail. The surface of stairs shall be slip resistant. Minimum vertical headroom is 6'-8" from the nosing. Max. riser height is 7[", and min. tread depth is 10". Max. vertical rise shall be 12'-7" between landings.

Landings shall be provided at the top and bottom of each stairway with a depth no less than 36" and a width no less than the width of the stairway served. Landings are not required at the top of interior stairs provided that a door does not swing over the stairs. Max. 1 step down to landing allowed at outside of exterior doors.

The greatest riser height or nosing within a flight of stairs shall not exceed the smallest by more than 3#8". At open risers higher than 30" above the floor or grade, openings shall not be greater than 4"

Handrails shall be provided on at least one side of each continuous stair flight with four or more risers, (a handrail is not required on staircases that have 4 risers if they are less than 30" above surrounding surfaces w/in 36" horizontal distance from the stairs). Handrails shall be 34"-38" tall, measured vertically from the sloped plane of the tread nosings. Handrails shall comply with R311.7.8.

Open sides of stairways, landings, ramps, balconies and porches which are more than 30" above grade shall be protected by a guardrail. All guardrails must be 36" above finished floor and shall allow no more than a 4" diameter sphere to pass through any portion of the railing per IRC R312.

Walls and ceilings of enclosed usable space under stairs requires 1/2" gypsum wallboard. The door to access such spaces need not be rated.

FIRE PROTECTION
Provide smoke detection per IRC section R314 & carbon monoxide detection per IRC section R315.

Provide 2x Fireblocking in concealed walls at 10' max. o.c., and at dropped ceiling transitions, and at the top and bottom of concealed stair stringers per IRC section R302.11

Opening between a private garage and residence shall be min. 1-3/8"thick, of solid wood, or solid honeycomb core steel doors or 20-min fire rated that are self-closing and self-latching. Openings between garages and sleeping rooms prohibited. Habitable rooms located above garages shall be protected w/ min 5#8" Type X gypsum board on the garage ceiling.

Secondary dwelling units separated from a garage must have a 1-hr fire rated ceiling/floor and/or wall assembly per IRC, Section R302.3 to separate between the garage and dwelling spaces. Exterior wall supporting construction must have a min. of 5#8" type x gypsum on the inside face of the wall per RCRBD adopted exception to IRC, Section R302.3.1.

Provide min. 1#2" drywall on the underside of all TJI joists to protect the engineered webs in the event of a fire per IRC Sec. R302.13. If the floor is located over a crawl space not used for storage or fuel-fired or electric powered heating appliances, the drywall is not required.

Roof eaves and soffits shall be protected on the exposed underside w/ min [" solid wood, ignition resistent, non-combustible, or FRWT products per IWUIC Section 405.3

Gutters and Downspouts shall be noncombustible material

Roof valley flashing shall be min. no. 26 galvanized sheet gage, corrosion-resistant over min. 36" wide underlayment consisting of one layer of 72-lb mineral-surfaced nonperforated cap sheet along full lenght of valley

Exterior vents shall not exceed 144 sq..in. ea. & covered w/ non-combustible corrosion resistant mesh w/ max. ;" openings

ROOF ASSEMBLIES (IRC CHAPTER 8 & 9)ASSEMBLIES (IRC CHAPTER 8 & 9)
Roof ventilation of enclosed roof assemblies shall comply with R806 and shall provide min. net free ventilating area of 1#300 of the area of the vented space. Provide 40%-50% of the ventilators no more than 3ft. below the highest point of the roof, and the remainder at the eave. All vents shall be protected against entrance of rain or snow and shall have openings between 1#16"- 1#4". The same venting area shall be provided between the insulation and roof sheathing. Continuous soffit vents shall be max. 2\" wide

Unvented roof assemblies shall comply with R806.5 with1 of the 4 following prescriptive options:
Note for all options, the roof shall dry to the inside, thus Class I vapor retarder shall NOT be installed on the ceiling.
1.^IIf air-impermeable insulation is used, it shall be Class II vapor retarder, min. R-49, and be applied directly to the underside of sheathing.
2.^IA combination of air-impermeable and air-permeable insulation may be used where min. R-30 air-impermeable is applied to underside of sheathing & shall be accompanied by min. R-30 continuous rigid board insulation above the sheathing.
3.^IAlternatively, R-30 air-impermeable insulation can be applied to the underside of sheathing, w/ min. R-30 air-permeable beneath.
4.^IInsulation may be installed above the structural roof sheathing as rigid board or sheet insulation to maintain 45 degrees on the underside of the structural roof sheathing.

Provide Grace 'ice and water shield' underlayment, or equivalent product, from the edge of roof overhangs to the ridge.

Asphalt shingles when applied on 2:12 to 4:12 roof pitches shall & require double underlayment (apply a 19" strip of underlayment parallel to and starting at the eaves. Apply 36" wide sheets of underlayment, overlapping successive sheets 19") Re: R905.2

Metal panel roofing shall have min. ;:12 slope & comply w/ R905.10. Apply underlayment in accordance w/ manufacturer's instructions

Attic access shall be provided if attic is more than 30" tall (measured from top of ceiling framing to underside of roof framing members for more than 30 sq. ft. Access shall have a rough-framed opening of min. 22"x30" with min. 30" clear headroom.

Snow guards shall be provided at the eave of all metal roofs, U.N.O

Roofing materials must have Class A Fire ratings

MECHANICAL/ENERGY SYSTEMS:SYSTEMS:
Appliances located in garages and having an ignition source shall be elevated such that the source of ignition less than 18" above the floor.

If appliances are located in the crawl space, an ignition barrier shall be provided per IRC section R316.5.4 on all ceilings/walls of mechanical room in crawl space.

Dryer exhaust systems shall be independent of all other systems, shall transport the moisture to the outdoors and shall terminate on the outside of the building in accordance with M1501 and M1502 w/ min. 36" clearance to building openings or soffit vents.

All bathrooms shall be vented per IRC section 303.3.

All kitchens in new construction must have a kitchen exhaust fan in accordance with Section M1505.4.4, or a ERV or HRV with an exhaust and supply line located within the kitchen area.

Dishwashers shall be connected to a separate stand pipe or approved air gap prior to connection to sanitary drainage.

Heating and Cooling equipment appliances shall be installed per manufacturers instructions and in accordance with IRC, Chapter 14.

Meter location must be approved by an Atmos Energy Corporation employee during a mandatory site visit to be scheduled after foundation is in place. Meters will not be allowed under a shedding roofline or where overhanging snow is a danger to the meter set.

If located within Routt County (w/ the exception of the Town of Hayden), the building or dwelling unit shall be tested with a blower door test by a certified 3rd party and verified as having an air leakage rate not exceeding three air changes per hour. A certificate of completion must besubmitted to the Routt County Building Department prior to a TCO or CO being issued.

Provide whole-house mechanical ventilation in accordance with Section M1505.4

Heating load calculations and equipment sizing shallbe submitted for review and approval when applying for a mechanical permit. Do not install or inspect mechanical equipment or HVAC until submitted to RCRBD and approved.

Snow and ice-melt systems shall have automatic controlsto shut the system off when the surface or outdoor temperature is above 40 degrees F and snow is not falling. Sensor locations shall not be located w/in 5-ft of Public ROW or Private Road edge of walking/driving surface, or under a roofoverhang or any object that would shade the sensor during daylight hours.

Freeze protection systems shall have automatic controls to shut off the systems when the outdoor air temperatures are abv. 40 degrees F. and shall include a moisture sensor to shut the system off in absence of moisture

Heated outdoor snow melt systems shall not be allowed unless they are powered by a 100% renewable energy source, or by exceptions as listed in RCRBD Adoptions Ordinance.

THERMAL ENVELOPE NOTES

The building envelope shall be durably sealed to limit infiltration. the sealing methods between dissimilar materials shall allow for differential expansion and contraction. the following shall be caulked, gasketed, weather-stripped, or otherwise sealed with a barrier material, suitable film, or solid material:

1. All joints, seams, and penetrations
2. Site-built windows, doors, & skylights
3. Openings between window & door assemblies
4. Utility penetrations
5. Dropped ceilings & chases adjacent to the thermal envelope
6. Knee walls
7. Walls & ceiling separating a garage from conditioned spaces
8. Behind tubs & showers of exterior walls
9. Behind fireplace inserts
10. Any other source of infiltration

Windows, skylights, & sliding doors shall have an air infiltration rate of no more than 0.3 cfm per square foot. swinging doors shall have an air infiltration rate of no more than o.5 cfm per square foot.

Recessed luminaries installed in the building thermal envelope shall be sealed to limit air leakage between conditioned & unconditioned spaces by being ic rated & labeled with enclosures that are sealed or gasketed to prevent air leakage to the ceiling cavity or unconditioned space.

PRESCRIPTIVE ENERGY CODE STANDARDS

Re: 2021 International Energy Conservation Code Table R402.1.2

Insulation & Fenestration Requirements By Component a

Climate Zone	Fenestration U-factor b,i	Skylight U-factor b	Glazed Fenestration SHGC b	Ceiling R-Value	Wall Wood g Framing R-Value (2x6 wall)	Mass Wall R-Value h	Floor R-Value	Basement Wall R-Value	Slab Perimeter R-Value & d Depth	Crawl c,g Space R-Value
7 & 8	0.30	0.55	NR	R-60*	R-27 cavity or R-20+R-5ci	19/21	38	R-15ci or R-19	R-10ci for 4 ft. deep around perimeter	R-15ci or R-19 or R-13+R-5ci

a	R-Values are minimums. U-factors & SGHC are maximums. When insulation is installed in a cavity which is less than the label or design thickness of the insulation, the installed R-value of the insulation shall not be less than the R-value specified in the table.
b	The fenestration U-factor column excludes skylights. The SHGC column applies to all glazed fenestration.
c	"ci" means continuous insulation on the interior or exterior surface of the wall. "R-19" at basement walls shall be cavity insulation or shall be permitted to be met with R-13 cavity insulation on the interior of the basement wall plus R-5 continuous insulation on the interior or exterior surface of the wall.
d	R-5 shall be provided under the full slab area of a heated slab in addition to the required slab edge insulation R-vale for slabs as indicated in the table. The slab edge insulation for heated slabs shall not be required to extend below the slab.
g	"Cavity" insulation shall be entirely within the wall cavity, "R-20+R-5ci" means R-20 cavity insulation plus R-5 continuous insulation
h	Mass walls shall be in accordance w/ Section R402.2.5. The second R-value applies where more than half of the insulation is on the interior of the mass wall
i	Max. U-factor of .32 in Climate Zones 3-8 to vertical fenestration products at elevations abv. 4,000 ft.
*	Or min. R-49 w/ min. 2" closed cell foam

COLORADO LICENSED
LUCAS B. UZMAN
32718
PROFESSIONAL ENGINEER

SealPact 2024-10-18 09:57:54 EST
Click seal or scan QR Code for verification; otherwise not valid.

TIMBERLYNE

www.timberlyne.com

Nebraska: 116 West 1st Street
Wayne, NE 68787
888-489-1680
Texas: 613 Hwy 46 E.
Boerne, TX 78006
877-680-1680

© 2021 Timberlyne, All Rights Reserved.
THIS PLAN AND DESIGNS CONTAINED HERIN ARE THE PROPERTY OF TIMBERLYNE GROUP™ AND MAY NOT BE REPRODUCED WITHOUT PRIOR WRITTEN CONSENT FROM TIMBERLYNE GROUP™.

CUSTOMER INFORMATION:

DAN
MCENTEE

PROJECT INFORMATION:

MCENTEE GROUP
HOME

200&202 SUNDANCE CT
STEAMBOAT SPRINGS,CO 80487

NUMBER:	MGR0524-1
CATEGORY:	Residential
STYLE:	SINGLE SLOPE
OTHER:	--
OTHER:	--
PM:	CM

DRAWING INFORMATION:

DRAWN BY:	BL
DATE:	10/16/24
STATUS:	STRUCTURAL
OTHER:	--
OTHER:	--

SHEET NOTES

SHEET

A100